PLEASE THINK BEFORE YOU PRINT

Specifications

SMART Board™ Interactive Whiteboard

Model 680

Physical Specifications

Size	65 1/4" W × 49 1/2" H × 5 1/8" D (165.7 cm × 125.7 cm × 13 cm)
Active Screen Area (maximum interactive, projected image)	61 5/8" W × 46 1/8" H (156.5 cm × 117.2 cm) 77" diagonal (195.6 cm)
FS670 Floor Stand (with SB680 Installed)	65 1/4" W × 67 3/4" to 81 3/4" H × 40 1/4" D (165.7 cm × 172.4 cm to 208 cm × 102.5 cm)
Weight	30 lb. (13.6 kg)
Shipping Size	
1 unit	73 1/2" W × 54" H × 5 1/2" D (186.7 cm × 137.2 cm × 14 cm)
8 units on pallet	55" W × 78 1/2" H × 45" D (139.7 cm × 199.4 cm × 114.3 cm)
Shipping Weight	
1 unit	45 lb. (20.5 kg)
8 units on pallet	380 lb. (172.7 kg)

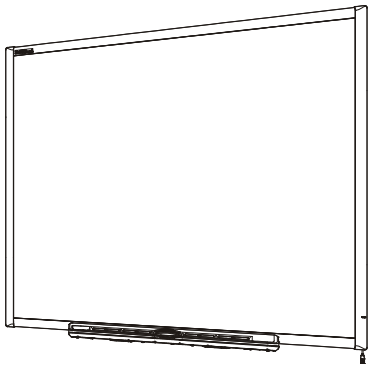

All dimensions +/- 1/8" (0.3 cm). All weights +/- 2 lb. (0.9 kg)

Standard Features

Software	SMART Notebook™ software included. See the SMART Notebook software specifications for a complete list of system requirements. Software upgrades are available at www2.smarttech.com/st/en-US/Support/SBS/.
Pen Tray	Optical sensors in the pen tray detect when you lift a pen or eraser from the tray. LEDs show the active tool.
Pens and Eraser	Black, blue, red and green pen tray pens and a rectangular eraser
Resolution	Touch resolution is approximately 4000 × 4000.
Screen Surface	The hard-coated surface is tear proof, optimized for projection, compatible with dry-erase markers and easily cleaned with whiteboard cleaner.
Digitizing Technology	Resistive
Frame Finish	Two-tone gray (approximates Pantone® Charcoal Gray 18-0601 TPX) and Ultrasonic Chrome (approximates metallic Pantone 877 C)
Wall-Mount Bracket	32" (81.3 cm) wide with five screws and drywall anchors to support a wall-mounted interactive whiteboard
Computer Connection	16' (5 m) USB 2.0 cable
Power Requirements	Power is obtained from the computer directly through the USB cable for Windows®, Mac and Linux® computers. Power consumption is less than 1.5 W (300mA at 5V).
Environmental Compliance	China EIP, EU RoHS, WEEE
Regulatory Certification	CB (TUV), CE, CSA (U.S./Canada), FCC, VCCI
Warranty	Five-year limited equipment warranty upon registration. See warranty document for details.

NOTE

A digital projector is not included with this model of SMART Board™ interactive whiteboard. To take advantage of all interactive features, you must integrate a digital projector.

Storage and Operating Specifications

Storage	-40°F to 120°F (-40°C to 50°C)
Operation	41°F to 95°F (5°C to 35°C) with up to 80% humidity non-condensing

SMART Order Number

SB680	77" (195.6 cm) diagonal SMART Board interactive whiteboard

Optional Accessories

Part Number	Description	NA	UK	EU	AU
CCJ680	Padded cover with handles for the SMART Board 680 and D680 interactive whiteboards				
HSCJ-680	Hard shipping case for the SMART Board 680 and D680 interactive whiteboards and the FS670 floor stand				
FS670	Mobile floor stand with 4" (10.2 cm) lockable casters and flip-up anti-tip feet				
PMWT-680	Projector wall mount for an NEC WT600 or WT610 projector				
RS232-XX	RS-232 to USB conversion module that allows a serial connection to the interactive whiteboard as an alternative to USB	✓	✓	✓	✓
WC6-XX	Wireless Bluetooth® connection between the SMART Board interactive whiteboard and the computer	✓	✓	✓	✓
SBA-XX	USB audio system with two 14 W speakers that mount to the interactive whiteboard or the wall	✓	✓		✓
SYSON6-XX	SystemOn expansion module wakes up the computer and turns on the projector with one button press	✓	✓	✓	✓
USB-GW	GoWire™ SMART Notebook software auto-launch USB cable				
USB-XT	16' (5 m) USB active extension cable				
CAT5-XT	USB to Cat 5 cable extender set				
RPEN-ER	Replacement set of four pen tray pens (black, blue, red and green) and rectangular eraser				
RPEN	Replacement set of four pen tray pens (black, blue, red and green)				
SPT	Set of four pointers (blue, red, green and yellow)				

NOTE

Part numbers ending in XX include region-specific power supplies for the countries or regions indicated by ✓ at the right. When ordering, substitute XX in the part number with the appropriate country code, as follows:

- NA = U.S. and Canada
- UK = United Kingdom
- EU = European Union
- AU = Australia

Physical Dimensions

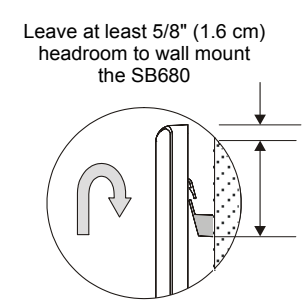

Wall Mounted Cut Away View



Wall Mounted Side View

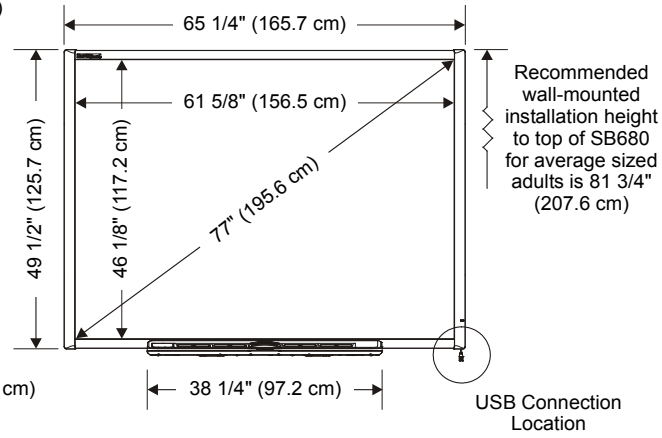

Wall Mounted Front View

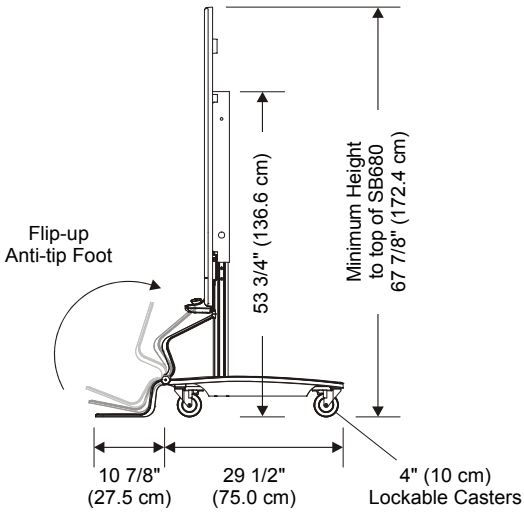

Floor Stand Mounted Side View (lowest position)

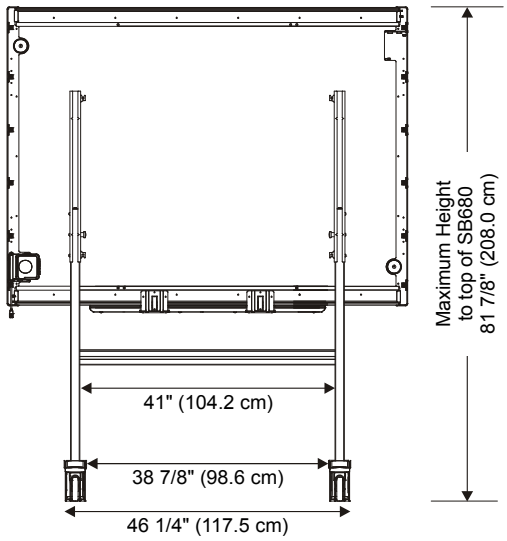

Floor Stand Mounted Back View (highest position)

© 2005–2010 SMART Technologies ULC. All rights reserved. SMART Board, SMART Notebook, GoWire, smarttech and the SMART logo are trademarks or registered trademarks of SMART Technologies ULC in the U.S. and/or other countries. Bluetooth is a trademark owned by Bluetooth SIG, Inc. and is used by SMART Technologies ULC under license. All other third-party product and company names may be trademarks of their respective owners. Patent No. US5448263; US6141000; US6320597; US6326954; US6337681; US6741267; US6747636; US7151533; US7289113; US7499033; US7626577; CA2058219; and CA2252302. Other patents pending. Contents are subject to change without notice. 04/2010.

SONOSELF LOCATION AUDIOVISUEL par VIDEOSON
8 rue du Château d'Eau · 78790 Courgent
01 39 24 84 84 · contact@sonoself.fr
sonoself.fr
Ce matériel en location sur sonoself.fr