TELESCOPIC LIFTERS

Installation & User Manual





LW 135R
LW 142R
LW 150R
LW 155R
LW 185R
LW 255R
LW 265R
LW 290R

LW 330

EN

SONOSELF
LOCATION AUDIOVISUEL par VIDEOSON
8 rue du Château d'Eau · 78790 Courgent
01 39 24 84 84 · contact@sonoself.fr
sonoself.fr

Ce matériel
en location
sur sonoself.fr

Rev. 5.0

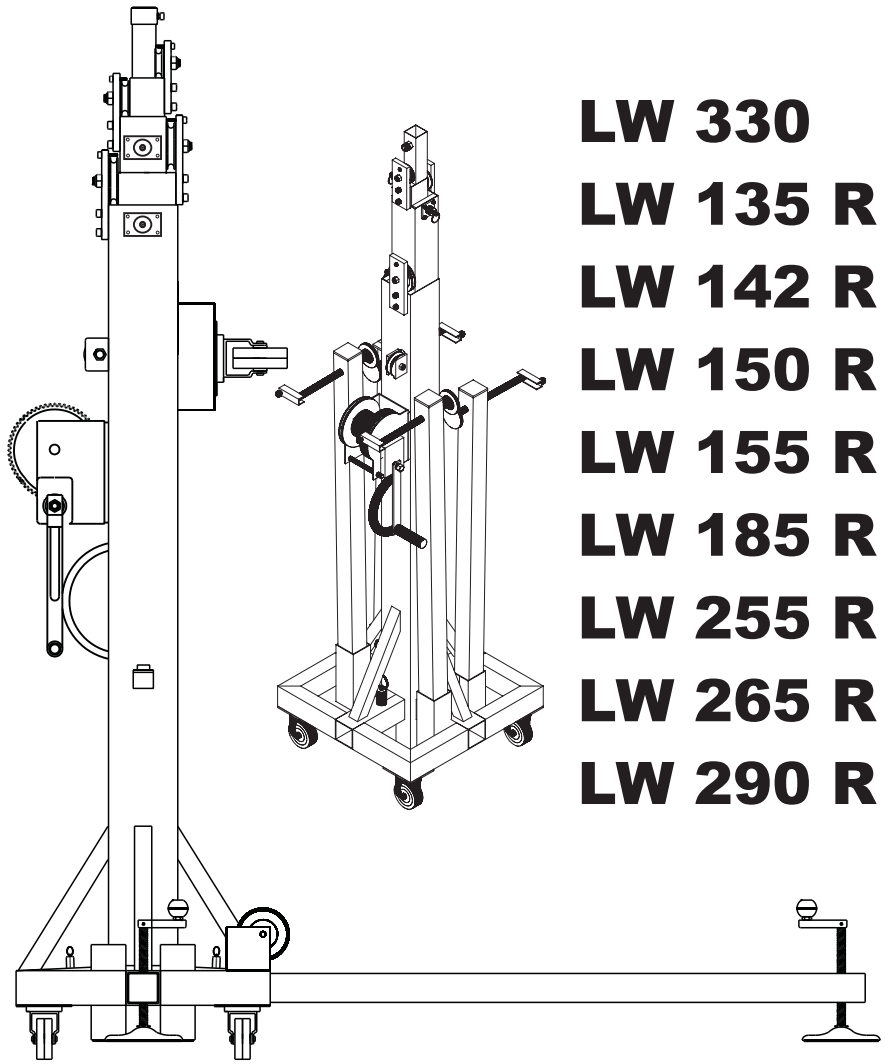

LW 330
LW 135 R
LW 142 R
LW 150 R
LW 155 R
LW 185 R
LW 255 R
LW 265 R
LW 290 R

WORK PRO INSTALLATION & USER MANUAL LIFTERS

INTRODUCTION	1
SPECIFICATIONS	2
TECHNICAL FEATURES	3
CAUTIONS BEFORE LIFT	5
ASSEMBLY AND USE INSTRUCTIONS	11
LIFTING PROCESS	13
LIFT DOWN AND FOLDED PROCESS	19
USING ADVICE	20
ACCESSORIES	21
CONFORMITY DECLARATION	23
BGV C1, EXPLANATION & TEST	24

INTRODUCTION

Thanks you to get a **WORK®** product. We hope to satisfy needs.

The **WORK®** lifters enjoy of the highest reputation, thanks to carefulness in the manufacturing and quality control in each spare part, such as the engineering which designed systems allowing its perfect working.

In a **WORK®** lifter, you would find:

SAFETY: Considering that the lifting towers are used in situations where the human being takes part, the security has been our main target.
For this, **BFV C1 (GUV 6.15), BGG812 (GUV 66.15) certification** obtained by our lifters give us a guarantee.

STRENGTH: Manufactured with best materials, it robustness avoids any problem of weight and transport, and resists any inclemency situation.

QUALITY: Every piece, has been suffered a very strict quality control on each process and assembly.

EASY CARRIAGE: Though for live events where the professional disposes of few time to carry on and fitting up.

ATTENTION VERY IMPORTANT

Before using the lifting tower, read carefully this owner manual.Handle none element if you are not sure of its fuction.

Let revise the lifter every year to your nearest distributor.

In the case you need change any element of the lifter, only use original **WORK®** spare parts. Only these spare parts guarantee a good working of this product.

All repairs of the lifter can be realised by a **WORK®** authorized establishment.

If you have any doubt, please contact us through the nearest distributor.

SPECIFICATIONS

	MAX LOAD (KG)	MIN LOAD (KG)	Ø INSERT. (mm)	DISPLAYED TOWER HEIGHT (M)	DISPLAYED TOWER BASE (M)	FOLDED TOWER HEIGHT (M)	FOLDED TOWER BASE (M)	WEIGHT (KG)
LW 330	100	25	35	3,3	1,3 x 1,3	1,3	0,15 x 0,15	20
LW 135 R	100	25	35	3,5	1,26 x 1,26	1,93	0,36 x 0,36	24
LW 142 R	100	25	35	4,05	1,29 x 1,29	1,59	0,36 x 0,36	29
LW 150 R	100	25	35	5	1,46 x 1,46	1,90	0,36 x 0,36	33
LW 155 R	150	25	35	5,3	1,49 x 1,49	1,72	0,36 x 0,36	43
LW 185 R	210	20	35	5,3	1,49 x 1,49	1,72	0,36 x 0,36	73
LW 255 R	220	25	55	5,3	1,78 x 1,78	1,75	0,46 x 0,46	86
LW 265 R	220	25	40	6,5	1,79 x 1,79	1,80	0,46 x 0,46	93
LW 290 R	290	25	50	6,6	1,79 x 1,79	1,84	0,46 x 0,46	135

	CABLE						WINCH	
	COMPOS.	Ø (mm)	RESIST. (N / mm2)	LOAD (KN - KP)	WEIGHT/Mt (KG/M)	ROLL.	Ø BOBBING (mm.)	REDUCT. RANGE
LW 330	6 x 19 +1 STANDARD (GALVANIZED)	4	1770	19.6 - 1990	0,055	CROSSED TO RIGHT	38	2.5 : 1
LW 135 R		4		19.6 - 1990	0,055		38	2.5 : 1
LW 142 R		4		19.6 - 1990	0,055		40	2.5 : 1
LW 150 R		4		19.6 - 1990	0,055		38	2.5 : 1
LW 155 R		4		19.6 - 1990	0,055		40	2.5 : 1
LW 185 R		6		19.6 - 1990	0,125		48	3.75 : 1
LW 255 R		6		19.6 - 1990	0,125		48	3.75 : 1
LW 265 R		6		19.6 - 1990	0,125		48	3.75 : 1
LW 290 R	7 x 19	7		28.8 - 2930	0,187		48	3.75 : 1

Standards and Regulations applied on winches incorporated on each lifting tower.

MODEL	STANDARDS AND REGULATIONS
LW 330	DIN 3060 / VGB 8 / TÜV 9591009.02
LW 135 R	DIN 3060 / VGB 8 / TÜV 9591009.02
LW 142 R	DIN 3060 / VGB 8 / TÜV 9591009.02
LW 150 R	DIN 3060 / VGB 8 / TÜV 9591009.02
LW 155 R	DIN 15020 / VGB 1 / VGB 8

MODEL	STANDARDS AND REGULATIONS
LW 185 R	DIN 3060 / VGB 8 / TÜV 9591009.02
LW 255 R	DIN 15020 / VGB 1 / VGB 8
LW 265 R	DIN 15020 / VGB 1 / VGB 8
LW 290 R	DIN 15020 / VGB 1 / VGB 8

TECHNICAL FEATURES (Only LW 330 model)

- Telescopic tower for lifting vertical load.
- System covers by an electrolytic bath of zinc.
- Telescopic tower composed of 3 sections extensible by means of an iron cable of high resistance to the traction, drives by pulleys and auto lubricated bearing.
- **LW 330** lifting tower has been designed for the transport in whatever way. Its exclusive folded system allows to reduce its dimensions to 1,3 meters height, being able to be carried in cars and small vehicles. Moreover its 20 kg becomes it in an ultraportable tower.

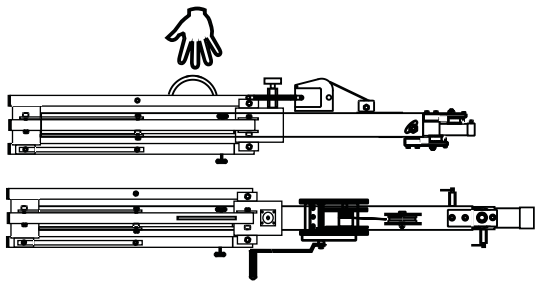

Bolts used in WORK® LW 330

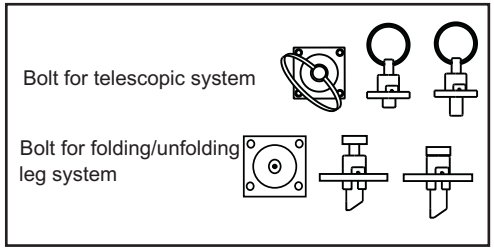

Its folded system consist of 4 legs, two of them dispose of extensible mechanism in order to correct whatever light inclination

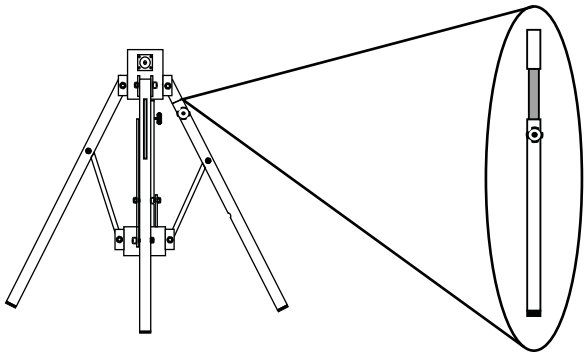

NOTICE: Use this function only in case to compensate a light inclination NEVER unfold these leg if the inclination of the surface can constituate a fall down risk.

TECHNICAL FEATURES (100R/200R series)

- Telescopic towers for lifting vertical load.
- System covers by an electrolytic bath of zinc.
- Telescopic tower composed of diverse iron sections extensible by means of an iron cable of high resistance to the traction, drives by pulleys and auto lubricated bearing.

MODEL	SECTIONS
LW 135 R	2
LW 142 R	3
LW 150 R	3
LW 155 R	4
LW 185 R	4

MODEL	SECTIONS
LW 255 R	4
LW 265 R	5
LW 290 R	5
LW 330	3

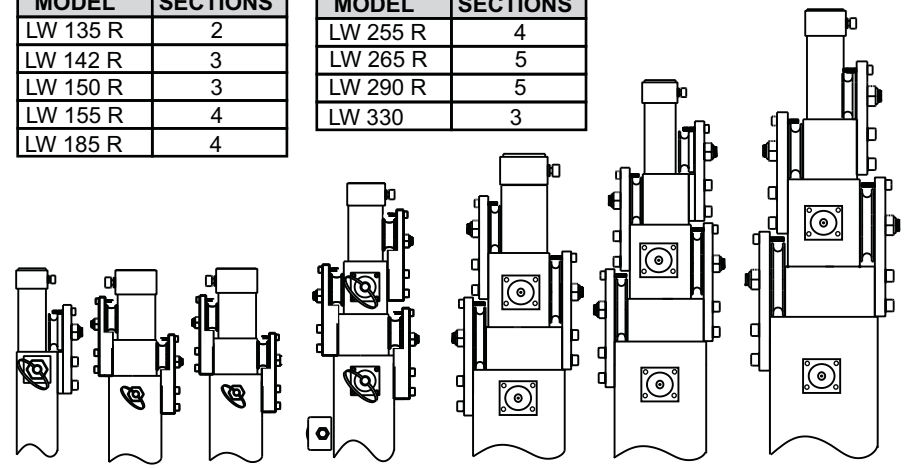

All mobile system is fixed through safety bolts. To apply them, pull the ring and turn it, the intern spring will proceed to liberate the plunger.

Bolts used in WORK® lifting towers

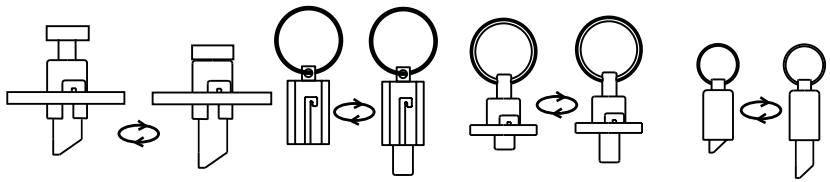

(*) LW 185 R with the same number of sections than LW 255 R but different bolt type

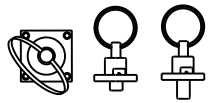

TECHNICAL FEATURES (100R/200R series)

- Extreme sides of legs are fitted with stabilizers for adjustable height.
- Turn on the handle to get a perfect balance of the lifter.

Important: Turn on circularly stabilizers handle carefully when you want to balance the the lifter with the vial.
It means, step by step and controlled that the verticality is right, not fully turn on one stabilizer and cause the unbalance and the fall of the lifter.

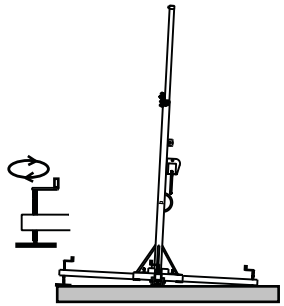

Water level allows adjusting the verticality of the mast lifter.

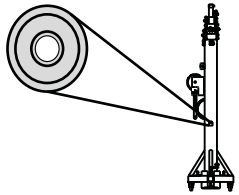

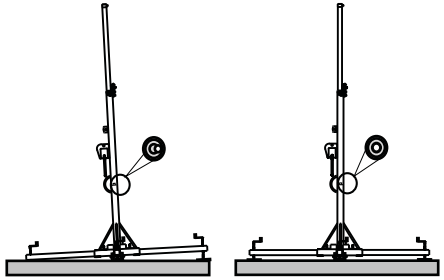

Fitted with wheels for its transport, depending in the model, wheels can be situated in different positions.

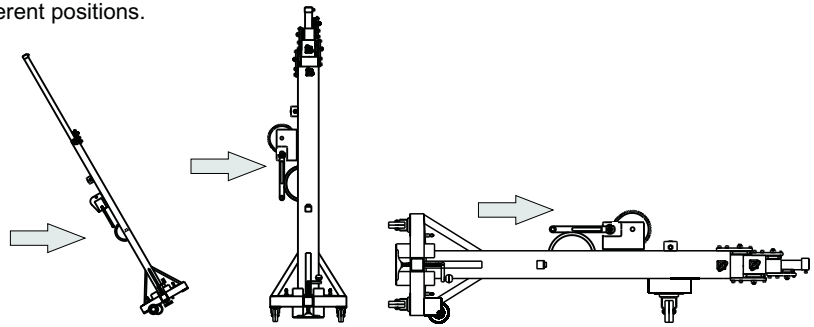

CAUTIONS BEFORE LIFT (LW 330 only)

1. Place the tower over a stable surface

If the ground presents some inclination, level it with the extension mechanism placed in two of the legs.

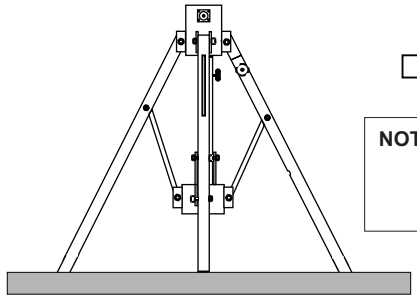

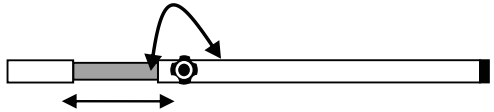

NOTICE: Use this function only in case to compensate a light inclination. NEVER unfold these leg if the inclination of the surface can constituate a fall down risk.

2. Beware the movement of the inferior mechanism during the folded and unfolded process. Could be dangerous put hands or finger in its way.

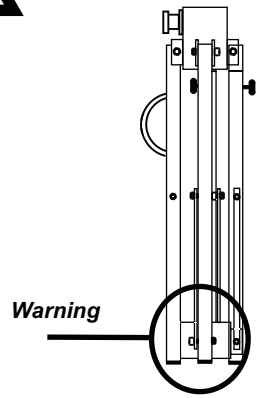

Warning

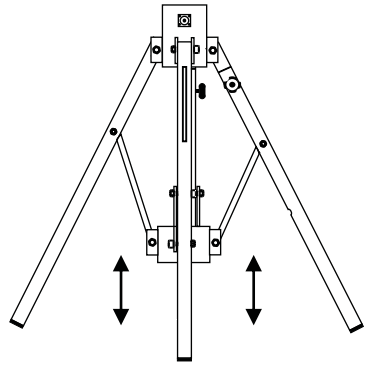

3. Block the safety pin when the tower has been unfolded until the chosen position

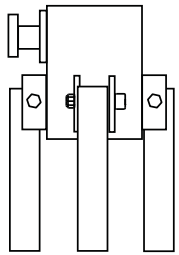

CAUTIONS BEFORE LIFT (100R/200R series)

Place the lifter on a stable surface.

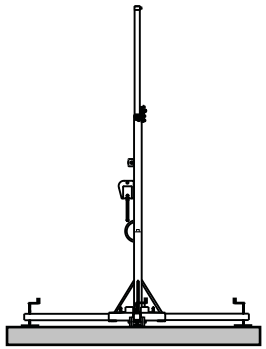

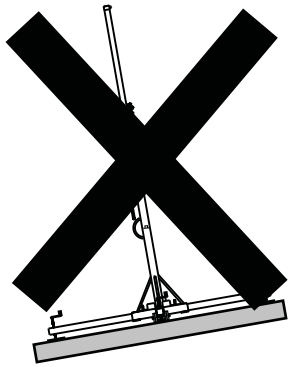

Check that the automatic bolt of the legs is correctly fixed to the base of the lifter and the trigger is well insured.

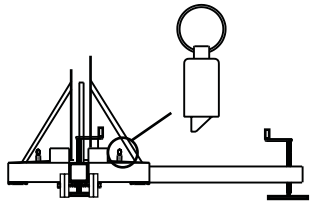

Balance the lifter in vertical position thank to the vial in the mast.
Turn clockwise the handle of stabilizer until adjusting the right level in the case you want to correct the level position.

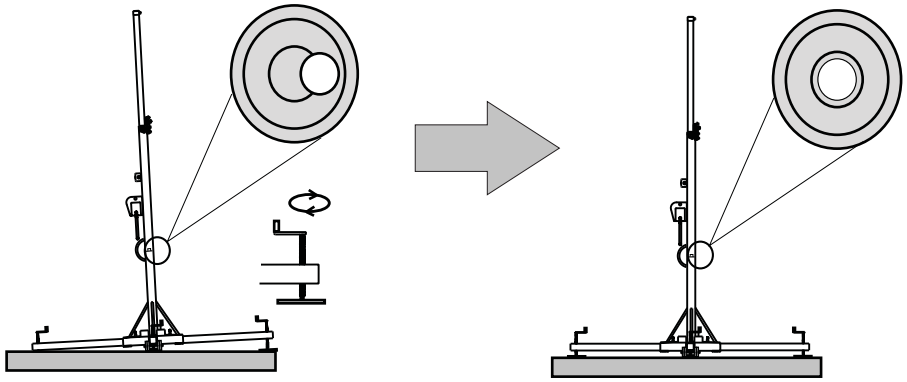

CAUTIONS BEFORE LIFT (Common cautions for all models)

Block distinct section of the lifter with safety bolts, it is very important to do it because in the case of break down in the wire, this precaution allows to jam all sections and avoid the fall of loaded sections consecutively.

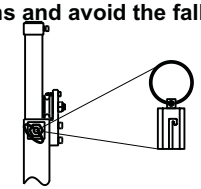

Before placing the load in the adecuated lifting Accessory, check that the load exceed the minimum stipulated for each tower.
A lower load applied than minimun one could make more difficult the descent load process.

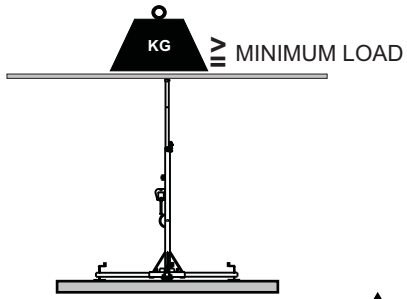

When you lift the lifter, notice possible Objects or cables which there are around the lifter

6. If you place the lifter outdoor, insure with ropes for avoiding possible swinging due to the wind.

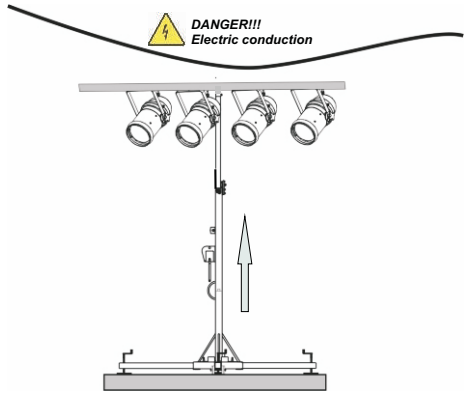

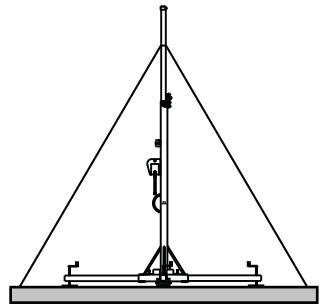

7. DO NOT REMAIN UNDER THE LIFTER ONCE IT IS FITED

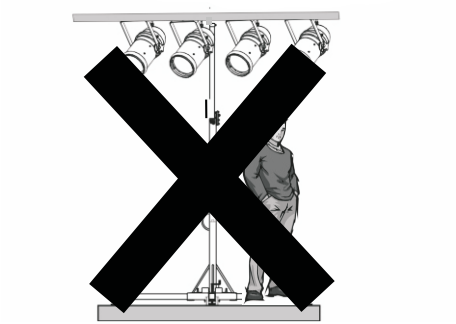

8. Do not move the lifter once it is lifted and loaded

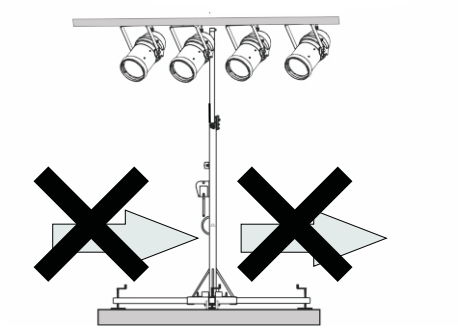

9. Please, insure an uniform distribution of the load in order to avoid a "lever" effect or the fall of the lifter.
(The possible solution could be the using of 2 lifters)

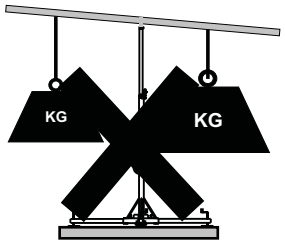

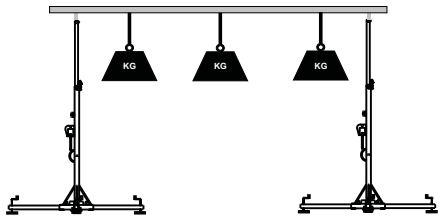

10.Verify the condition of the winch and the wire.

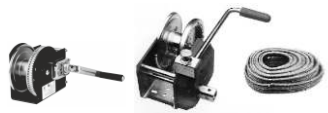

11. DO NOT overload the lifter.

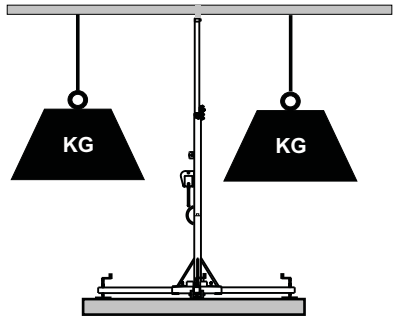

12. DO NOT lubricate the brake system of the winch the mechanism could be lost efficiency.



13. DANGER. THE LIFTER IS NOT DESIGNED TO LOAD PEOPLE.

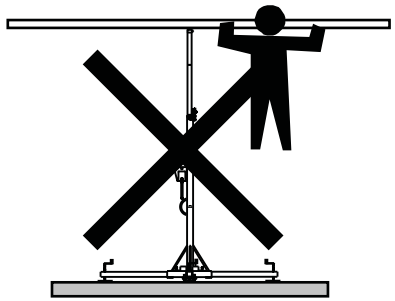

ATTENTION!! VERY IMPORTANT

It is of vital importance for your safety that you carefully this owner manual before manipulating the telescopic lifter.

1. Situate the lifting tower over a level and steady surface. If the ground presents some inclination, level it with the extension mechanism placed in two of the legs. In order to unfold the tower, unblock the safety pin. The inferior mechanism will move upside, unfolding the legs.

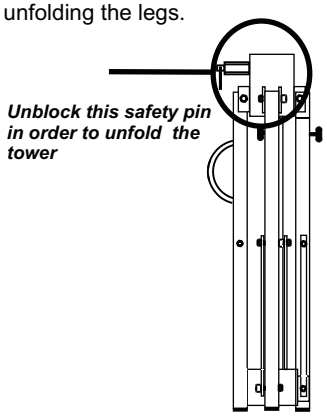

Unblock this safety pin in order to unfold the tower

Tower unfolded

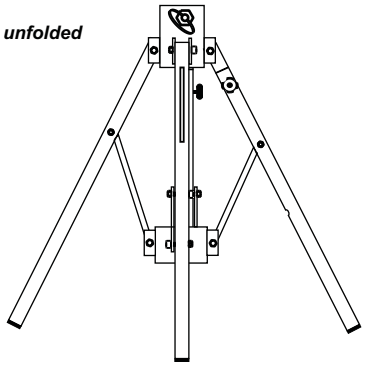

2. If the ground presents some inclination, level it with the extension mechanism placed in two of the legs.

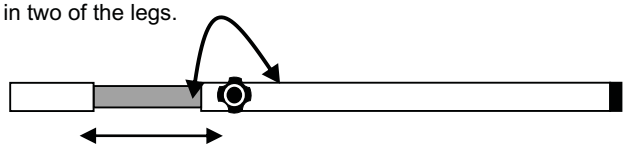

3. Place the load on the tower with the appropiated lifting accessory without overpassing the maximum weight specified by the manufacturer.

- Place the lifter over a plate and balance surfaces

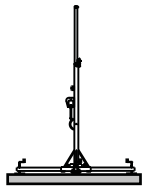

- Take out legs from the transport lodging, turn on the trigger and insert legs until its right position, turn on again the trigger insuring the firmness of the assembly.

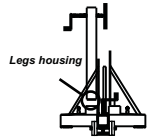

Legs housing

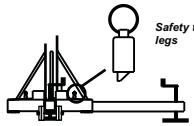

Safety trigger for legs

- Adjust the stablility of the lifter with the handle of each leg, until reaching centre the bubble of the water level.
(NOTE: FOR A HIGHER STABILITY, REGULATE THE HEIGHT OF LEGS UP TO WHEELS LEFT TO BE IN CONTACT WITH THE FLOOR)

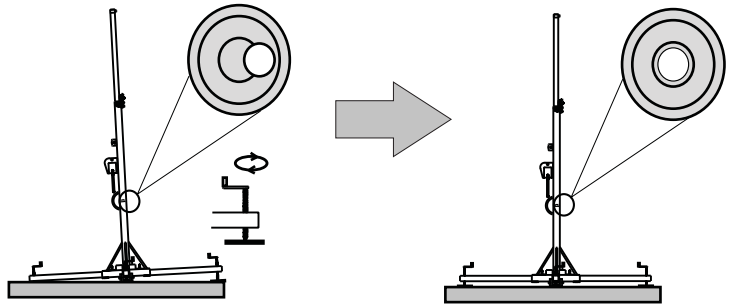

- Place the load over the fitting support for each type of lifter , without overload the maximum weight specifies.

LW 290 R disposes of a new security block system, that allows to fix and secure the lifting tower in whatever position.
This new system offers an easy operation, because you can save the work to unblock and block the trigger during the lifting process. Now, blocking all triggers, it is possible to lift the tower for an easy way.

Once the lifter is fixed firmly on the floor and the bubble of the water level in the centre, after follow all previous steps, the lifter is now ready for its lifting.

1. The first that we would control, it is ***ALL SAFETY BOLTS ARE IN BLOCKED POSITION***. In the case that one of t hem is in unblocked position, pass to the blocked position.

- The liberated section, lifts thank to the pulley system.
The mechanism of auto brake in the winc h also allows stopping all the process without producing the sudden fall of the section if this has not fixed.

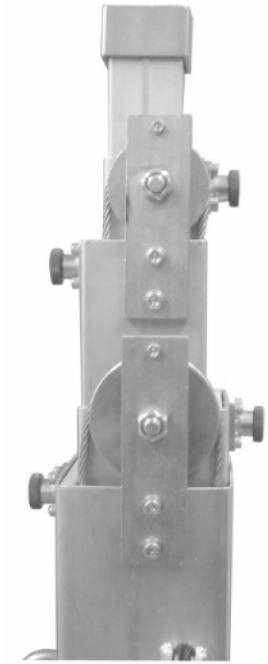

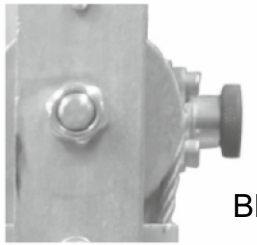

BLOCKED

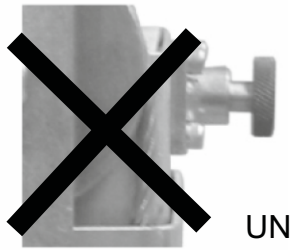

Avoid this situation

UNBLOCKED

IMPORTANT: During all lifting process the triggers MUST NOT BE UNBLOCKED

-The sections dispose inside them, holes where the liberated bolt is lodged maintain the lifter fixed in an end position or several intermediaries. These holes have elliptical shape in order to support better the weight loaded.

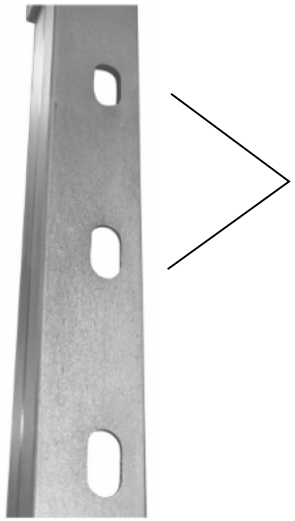

Holes with elliptical shape

When you turn the crank as it is indicated in the drawn, the pulley system will work on all sections, lifting “in theory” the lightest however it is not 100% reliable. The section lifting order depend on the friction between them. Normally it occurs with the upper section , which is the first to be elevated, but if the load is distributed in different way, the liftered section could be another. For this reason is very importan to distribute the load in an uniform way.

Rotation Way

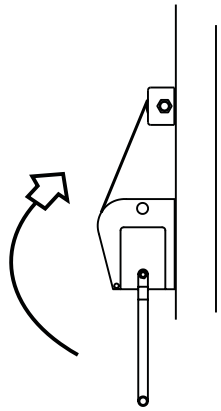

LIFTING PROCESS (LW 290 R only)

In that moment the first section will lift and the trigger will be unblocking slowly

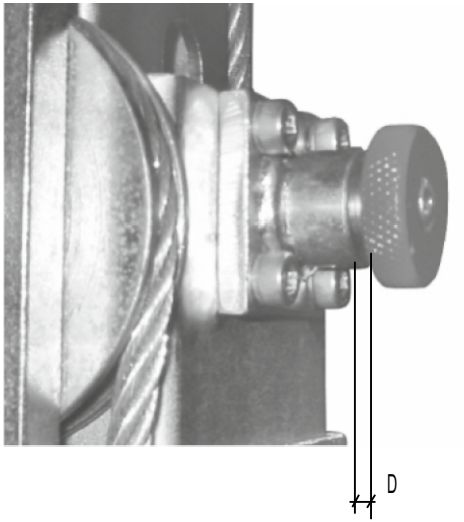

The distance “D” increase until a hole will be in front of trigger, in that moment the trigger is blocked (D=0) and tower secure.
We can continue with the process and the behaviour of the trigger will be the same until to reach the desired height or all section will be unfolded.

Now, the lower section will lift with the same way. Remember not to unblock none trigger during this process.

ATTENTION!! VERY IMPORTANT

Once finished the lifting process, insure that all bolts are in blocked position.

NOTE: If in the process of lifting the lifter, section is stayed blocked, do not force the crank. If you can not release the bolt, you should rotate the winch in the contrary sense meanwhile that you draw out the bolt until you fully unblock.

LIFTING PROCESS (Common process for all models)

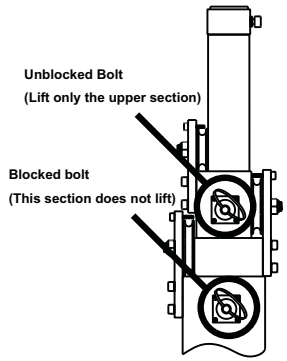

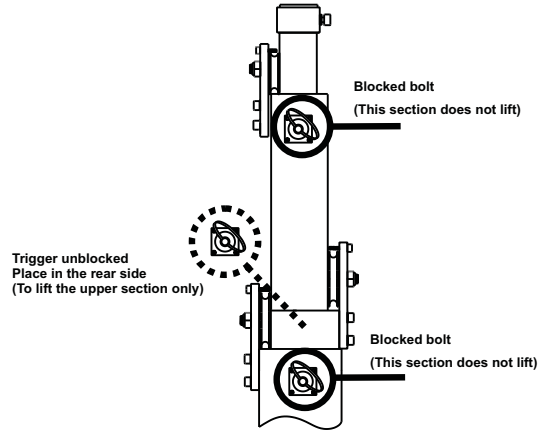

3. The right form of lifting is, first the upper section, after t he successive lower parts.

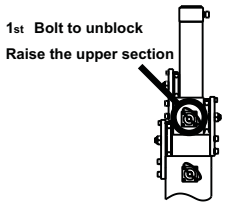

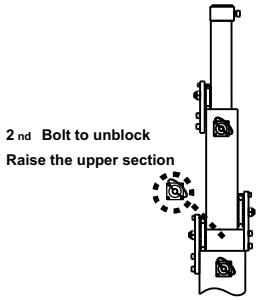

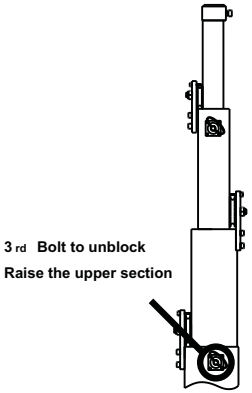

4. Now you can start lifting up the lifter. When the raising section it is near the desired height, release the bolt.
Then, go on lifting up softly until the bolt is introduced into the section. In this moment, if you desire to go on with the lifting up, unblock the corresponding bolt to the next section.

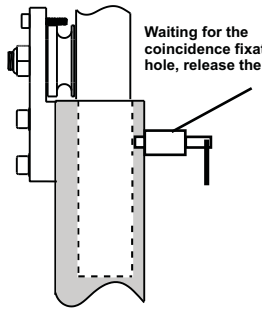

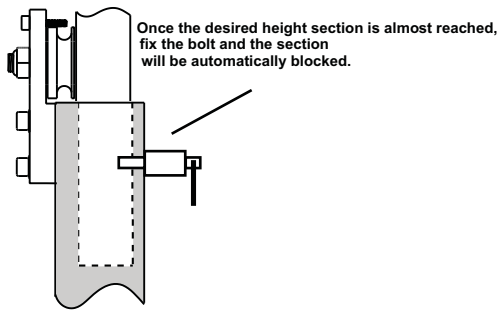

Once the lifter is fixed firmly on the floor, the lifter is now ready for its lifting.

1. The first that we would control, it is all safety bolts are in blocked position (1). In the case that one of them is in unblocked position (2), pass to the blocked position (1).

- The liberated section, lifts thanks to the pulley system. The winch auto brake mechanism also allows to stop all the process without producing the sudden fall of the section if this has not fixed.

-The sections dispose inside them, holes where they are lodged the liberated bolt and maintain the lifter fixed in an end position or several intermediaries.

When you get these positions, turn on the trigger for a perfect fixation of the section.

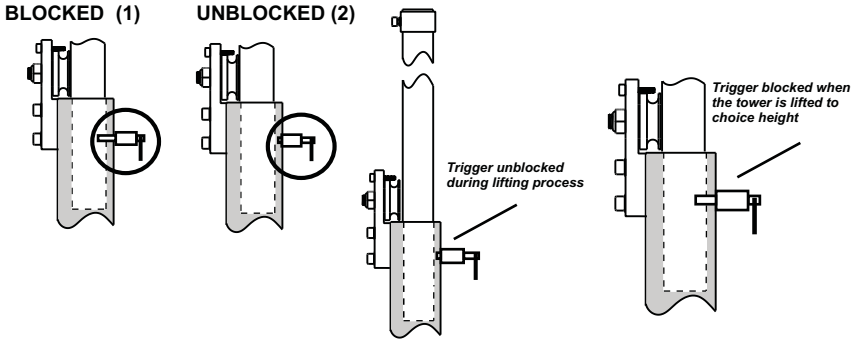

2. Before lifting the lifter, you should understand the working of the system.

When you turn the crank as it is indicated in the drawn, the pulley system will work on all sections, lifting "in theory" the lightest however it is not 100% reliable.

The only form to lift the desired section is **UNBLOCKING SOLELY** the bolt which jams this section.

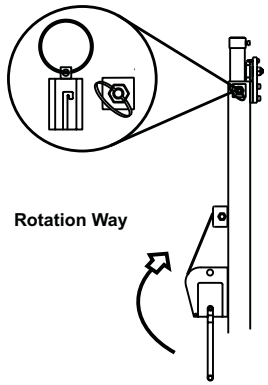

IMPORTANT

The cable must always maintain the strain in order to make easy the lifting process.

After fixing the section in the desired position with the bolt, unblocked the following section in necessary case and go on lifting up.

FOR A SAFETY BLOCKING, FIX TRIGGERS TO CORRESPONDING HOLES

ATTENTION!! VERY IMPORTANT

Once finished the lifting process, insure that all bolts are in blocked position.

NOTE: If in the process of lifting the tower, section is stayed blocked, do not force the crank. If you can not release the bolt, you should rotate the winch in the contrary way meanwhile that you draw out the bolt until you fully unblock.

ATTENTION!! VERY IMPORTANT

Look after the load while you go down the lifter. Do not be in hurry when you lift down the load, be carefully.

The lifting down process is exactly the contrary to the lifting up. So, we start to unblock all the lowest bolts of the lifting tower and turn on softly the crank in the anticlockwise way and check the load for possible oscillations.

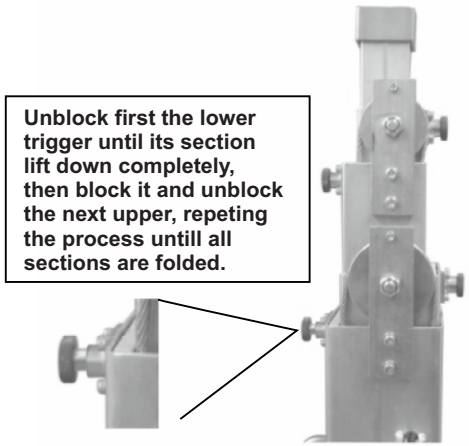

ATTENTION!! VERY IMPORTANT

NOTE: When you lift down the lifter, if any of sections will not fully go down, stop to rotate the winch because the system will be rigidity and it would bring about a sudden descent of this section.
To avoid this, rotate the crank in the opposite sense as if you lift down and insure that the bolt of this section is unblocked, so repeat the lifting down process.
In the case the problem persists, look a fter that the lifter has a minimum load to easy the descent of sections.

If the height you desire to get and it is not the top, distribute the extension of all sections equitably to avoid an unbalance when you lift up the first section until its top and left the rest without lifting up.

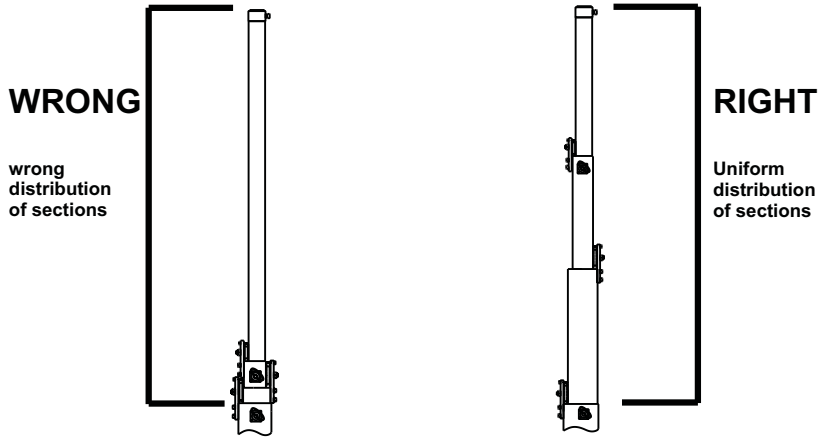

When the load is largely placed, it is recommendable to use 2 lifters so the load is distributed and balanced too.

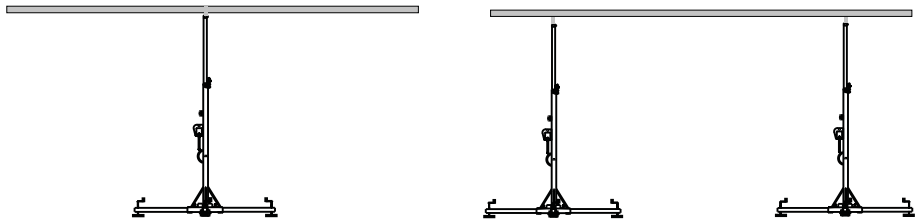

For getting optimize and efficiency working of this lifter and a longer using, please consider following recommendations:

Check periodically the condition of the wir e, unrolling the reel fully and watch over that the filament is not unthreaded, breach or flatten.
In the case you detect any of these probl ems, contact with your distributor to proceed of the change.

Lubricate periodically the toothed wheel of the winch and lifting bearings of each section, as the lifting mechanism of the legs.

NEVER LUBRICATE THE BRAKE MECHANISM OF THE WINCH, IT DISPOSES OF SPECIAL LUBRICATE SYSTEM AND THE ADDITION OF ANY OTHER COMPONENT IN THE MECHANISM, CAN SERIOUSLY AFFECT ITS WORKING.



Support bar for truss.
Adjustable width.
Bar lenght: 600 mm.

Accessory	Lifting Tower	Accessory	Lifting Tower
AW 135	LW 330	AW 135	LW 185R
	LW 135R	AW 155	LW 255R
	LW 142R	AW 140	LW 265R
	LW 150R	AW 150	LW 290R
	LW 155R		



Support bar for truss.
Fixed width.
Bar lenght: 250 mm.

Accessory	Lifting Tower	Accessory	Lifting Tower
AW 235	LW 330	AW 235	LW 185R
	LW 135R	AW 255	LW 255R
	LW 142R	AW 240	LW 265R
	LW 150R	AW 250	LW 290R
	LW 155R		



Lateral support bar
for truss.
Adjustable width.
Bar lenght: 212 mm.

Accessory	Lifting Tower	Accessory	Lifting Tower
AW 335	LW 330	AW 335	LW 185R
	LW 135R	AW 355	LW 255R
	LW 142R	AW 340	LW 265R
	LW 150R	AW 350	LW 290R
	LW 155R		

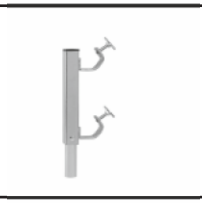

Parallel truss support

Accessory	Lifting Tower	Accessory	Lifting Tower
AW 10	LW 330	AW 10	LW 185R
	LW 135R	AW 13	LW 255R
	LW 142R	AW 12	LW 265R
	LW 150R	AW 20	LW 290R
	LW 155R		



Twin lateral support
for truss.
Fixed width.
598 x 200 mm.

Accessory	Lifting Tower	Accessory	Lifting Tower
AW 435	LW 330	AW 435	LW 185R
	LW 135R	AW 455	LW 255R
	LW 142R	AW 440	LW 265R
	LW 150R	AW 450	LW 290R
	LW 155R		



Truss adapter.
400 x 600 mm.

Accessory	Lifting Tower
AW 19	LW 255R
AW 20	LW 265R
AW 30	LW 290R



Support bar for truss.
Fixed width.
Bar lenght: 250 mm.

Accessory	Lifting Tower	Accessory	Lifting Tower
AW 1	LW 330	AW 1	LW 185R
	LW 135R		
	LW 142R		
	LW 150R		
	LW 155R		

ACCESSORY INSERTION (Procedure)

1. Use the correct accessory according the insertion diameter (see closed table)
2. Unscrew the Allen type screw on the end piece of the lifting tower.
3. Insert the accessory and fasten firmly the Allen screw in order to ensure the accesory into the lifting tower.

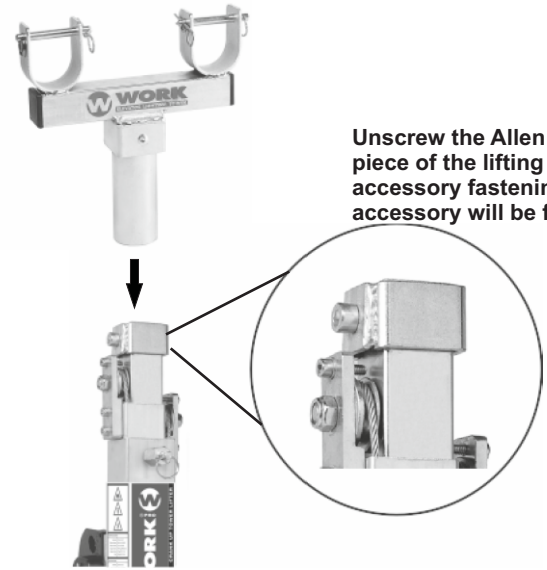

Unscrew the Allen type screw on the end piece of the lifting tower and insert the accessory fastening the screw until the accessory will be firm.

EQUIPSON S.A.
Av. del Saler nº:14, Polígono Industrial L'Alteró. Silla 46460, Valencia - España
Tel.: +34 96 121 63 01 / Fax: +34 96 120 02 42 - equipson@equipson.es / www.equipson.es

CONFORMITY DECLARATION

The described Truss-Lifts meets all the requirements specified in the Directive 2006/42/EC of the European Parliament and the Council of 17 May 2006 on machinery, and amending Directive 95/16/EC.

Applicant	:	**EQUIPSON, S.A**
Address	:	Avda. El Saler, 14 Pol. Industrial L´Alteró 46460 SILLA - Valencia (Spain)
Representative	:	**EQUIPSON, S.A**
Address	:	Avda. El Saler, 14 Pol. Industrial L´Alteró 46460 SILLA - Valencia (Spain)
Description	:	Lifts for Truss Systems

WORK® LW 330 **WORK®** LW 135R
WORK® LW 142R **WORK®** LW 150R
WORK® LW 155R **WORK®** LW 185R
WORK® LW 255R **WORK®** LW 265R
WORK® LW 290R



Juan José Vila
(Product Manager)
October 22, 2009

CE

The test report was carried out from the submitted type-samples of a product in conformity with the specification of the respective standards. The certificate holder has the right to fix the CE-mark on the product complying with the inspection samples.

BGV C1 REGULATION, Explanation

BGV C1 is a regulation for Staging and Production Facilities for the Entertainment Industry. Lifting and rigging equipment is just part of this standard and cover structures and other technical matters.
Adopting
BGV C1 is entirely voluntary (except in Germany) but its adoption is generally required by insurance companies and therefore it has effectively become an industry standard.
The application of this standard over lifting towers is vital due to in theatres, stages, etc. are used to move loads over performers and, in some cases, above spectators, representing a potential falling risk.

BGV C1 REGULATION, Application fields

This standard is orientated in two ways:
By one side, the lifting towers adopt designs and materials in order to achieve a high security degree in magnitudes like load supported, balance, friction resistance, etc.
So a **WORK®** lifting tower **BGV C1** certified ensures the customer that has passed strict test during its design, materials choice or load and effort verifications.
By other side, in order to achieve an optimum operation with these units, is recommended as much a responsible use of the unit, complying basic rules like maximum load accepted or tower balance as maintenance periodic, which must be carried by expert technicians, checking the good state of the steel cable and winch, operation of the safety bolts and folding/unfolding of the entire profile system.

BGV C1, TESTS & CHECKS

MODEL SERIAL NUMBER

INITIAL CHECK (First year) Checked by

Date Signature

Tested elements and conclusions

FOUR YEARS TEST Checked by

Date Signature

Tested elements and conclusions

ANNUAL TEST (passing the fourth year) Checked by

Date Signature

Tested elements and conclusions

ANNUAL TEST (passing the fourth year) Checked by

Date Signature

Tested elements and conclusions

ANNUAL TEST (passing the fourth year) Checked by

Date Signature

Tested elements and conclusions

WORK PRO®

www.worklifters.com