MULTI-PURPOSE CONSOLES

FX16



16 Mono Channels
with onboard
Lexicon Effects

FX8



8 Mono Channels
with onboard
Lexicon Effects

SX



12 Mono &
4 Stereo Inputs

M SERIES



4/8/12 Mono &
4 Stereo Inputs

E SERIES



6 or 8 Mono &
4 Stereo Inputs

NOTEPAD



4 Mono &
2 Stereo Inputs

SPIRIT RANGE BROCHURE

MULTI-PURPOSE

Soundcraft

CONTENTS

Spirit Mixers at a glance 4

Power Features 4 - 7

The Mixers in detail 8 - 18

Mixer Applications 19 - 23

Dimensions & Specifications 24 - 25

Frequently Asked Questions 26

Glossary of Technical Terms 27

Other Soundcraft products back cover

QUICK SELECTOR Compare Spirit Mixer Inputs & Features Quickly

Features Table Page 4

POWER FEATURES What makes Spirit consoles special

Features in depth Pages 4 - 7

FX16 16 Mono Channels with onboard Lexicon Effects

Full Product Description Pages 8 & 9
Dimensions Page 24
Specifications Page 25

FX8 8 Mono Channels with onboard Lexicon Effects

Full Product Description Pages 10 & 11
Dimensions Page 24
Specifications Page 25

SX 12 Mono & 4 Stereo Inputs

Full Product Description Pages 12 & 13
Dimensions Page 24
Specifications Page 25

M SERIES 4/8/12 Mono & 4 Stereo Inputs

Full Product Description Pages 14 & 15
Dimensions Page 24
Specifications Page 25

E SERIES 6 or 8 Mono & 4 Stereo Inputs

Full Product Description Pages 16 & 17
Dimensions Page 24
Specifications Page 25

NOTEPAD 4 Mono & 2 Stereo Inputs

Full Product Description Page 18
Dimensions Page 24
Specifications Page 25

APPLICATIONS Using Spirit Mixers in Various Situations

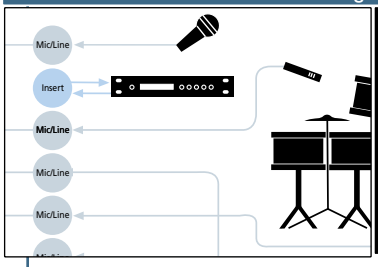

Introduction Page 19
Live Mixing Page 20
Houses of Worship Page 21
Installed Sound Page 21
Submixing Page 22
Video Editing Page 22
Small/Home Studio Page 22
Studio Recording Page 23

OTHER SOUNDCRAFT PRODUCTS How to find out more



See Back Cover

WORLD CLASS MIXERS

The Spirit range from Soundcraft rates among the world's best selling series of compact mixers. Designed by sound industry legend, Graham Blyth, the multi-award-winning Spirit range is unique in providing professional features and sound quality at a price everyone can afford.

Every console in the Spirit range is designed to incorporate the warm, British EQ that has made Soundcraft, the leading name in live, studio and broadcast mixing for nearly 30 years.

Soundcraft has always been at the forefront of console design and since the Spirit range's inception in 1991 it has been responsible for many of the sound industry's most ground-breaking products including the award-winning Digital 328 (the latest generation of which is the 328XD) and, of course, the original Spirit console that launched so many imitations. Spirit range mixers include not only recording but powered and live mixers for use in installations and live music applicatiomns Designed in the UK, the latest manufacturing processes and technologies ensure the high quality and exceptional value of all Spirit range designs.

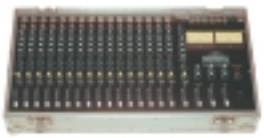

Soundcraft Series 1 - where it all began

When the Spirit range was first launched, mixing desks were either large and expensive, or small but ineffective. Soundcraft Spirit changed all that. Packed with features, more channels and professional-standard sound quality, Soundcraft Spirit was literally a revolution.

The original design has now been refined and developed to produce an unparalleled range boasting 100mm faders, the on-board Lexicon effects of Spirit FX16 and FX8, the extremely compact Spirit Notepad, the all round usability of the Spirit SX and F1, and the M Series with S/PDIF digital output.

Famous Spirit users today include artists like The Orb, Manic Street Preachers, INXS, Jean-Michel Jarre, Sasha, Catatonia, M:People, the Chemical Brothers, Asian Dub Foundation, Texas, Pulp and Portishead*. To discover for yourself why they all chose Spirit, read on.

TEXAS

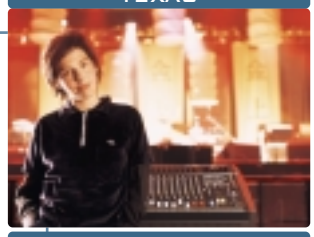

PORTISHEAD



ALICIA'S ATTIC



CATATONIA



GOMEZ



* No endorsements implied.



The new Soundcraft MH4 Live Performance console

THE SPIRIT ADVANTAGE

Soundcraft Spirit mixers share the same design philosophy, aimed at delivering uncompromising audio quality and a wide range of features in compact, affordable products. Many features are common to all Spirit range models, and these in turn are often based on features of Soundcraft's large-format professional mixer designs – also designed by Spirit guru Graham Blyth. After all, when you've invented the best ways of building professional mixers, it makes sense to use the same techniques in designs of all sizes.

ULTRAMIC™

The mic pre-amp is one of the more critical points in the signal chain. Both live and in the studio, any distortion or noise that is introduced at this stage will remain a problem. Graham Blyth's UltraMic™ design sets a new standard for compact mixer pre-amp performance, and has earned praise from countless reviewers and users around the world. Unlike designs which favour certain types of microphone, the

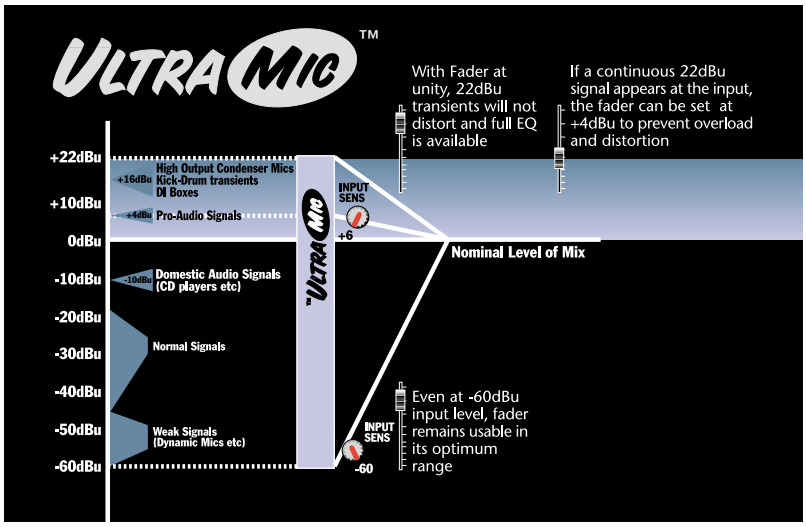

Quick Reference Mixer Selector

	FX16	FX8	SX	M Series	E Series (ES)	Notepad
Typical Applications	Multipurpose	Multipurpose	Multipurpose	Multipurpose	Multipurpose	Multipurpose
Band/PA Setups	•	•	•	•	•	•
Small Venues, Conferences	•	•	•	•	• (not ES)	•
Installed Sound	•	•		•	•	
Schools, Houses of Worship	•	•	•	•	•	•
Studio Recording	8/16 Track	8 Track	4/8 Track	DAW	Small/MIDI	
Video Pre/Post Production	•	•	•	•	•	•
Sub/Location Mixing			•	•	• (not ES)	•
Multimedia	•	•	•	•	•	•
Rack Mount	Option	Option	Option	Yes	Option	No
Frame Sizes	26 inputs max	16 inputs max	20 inputs max	30 inputs max	26 inputs max (28 ES)	10 inputs max
Mono Channels (Mic or Line)	16	8	12	4, 8 or 12	6, 8 or 12 (4 ES)	4
Inserts	Mono Inputs, Sub-mix, Mix	Mono Inputs, Sub-mix, Mix	Mono Inputs, Mix	Mono Inputs, Mix	Mono Inputs, Mix	None
Stereo Channels	4 stereo returns	4 stereo inputs	2 channels with 4 stereo inputs	4 stereo inputs	2 (10 ES)	2 stereo inputs
Groups	2	2	2	No	No	No
Direct Outs	Mono Channels 1-16	Mono Channels 1-8	Mono Channels 1 - 8	Mono Channels	No	No
EQ Bands (mono inputs)	3 (mid sweep)	3 (mid sweep)	3 (mid sweep)	3 (mid sweep)	3 (mid sweep)	2 fixed
EQ Bands (stereo inputs)	None	2 band fixed on main 2	2 band fixed on main 2	2 band fixed	2 band fixed (3 ES)	None
High Pass Filters	Mono inputs	Mono inputs	Mono inputs	Mono inputs	None	None
Auxiliary Sends	3 + Lexicon	2 + Lexicon	3	4	2	1
Returns	4 Stereo Returns	Stereo Tape Return	Stereo Tape Return to Monitor	4 Stereo returns 1 stereo playback	Stereo Tape Return to Monitor/Mix	1 Stereo
Phantom Power	Global	Global	Global	Global	Global	Global
S/PDIF Output	No	No	No	Yes	No	No

exceptionally wide gain range of the UltraMic™ (see diagram below) means that it can just as easily amplify the signal from a low-output ribbon mic as a high-output condenser type. In fact signals as hot as +22dBU can be accepted, which means that it's almost impossible to push an UltraMic™ into distortion. Over its entire 60dB gain range, the noise and rejection of interference of UltraMic™ are exceptional – a careful look at the EIN (Equivalent Input Noise) figures in the specs show that the UltraMic™ is almost silent. But then again, a careful listen to any Spirit would tell you the same thing.

The UltraMic™ input is also easy to use, reflecting another important part of the Soundcraft philosophy. With its custom pot for gain control, the whole of the pot's travel gives useful adjustment, whereas most mic pre-

HIGH-PASS FILTERS

A High-Pass Filter is arguably one of the most important features on a channel strip, enabling unwanted low-frequency noise to be removed from a signal. Mics on stage can pick up a good deal of rumble, and by using an HPF you can still employ the LF part of the channel EQ for creative work, rather than using it for keeping stage rumble at bay.

In order to be truly effective, however, high-pass filters need a steep slope. Spirit filters use an ultra-steep 18dB/octave slope (rather than the more common 12dB/octave, shown by a dashed line in the diagram) which means that all of the lower frequencies are attenuated – a less steep slope allows more bass frequencies to slip through, which is bad. By positioning the filters at 100Hz (-3dB), Spirit's HPFs act on the full range of lower frequencies that cause clarity problems in mixing. The more commonly-used 50Hz or 75Hz filter points tend to work only on the very lowest frequencies.

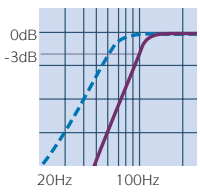

Compare the typical frequency ranges of different voices and instruments with the EQ ranges found on Spirit mixers (shown below):

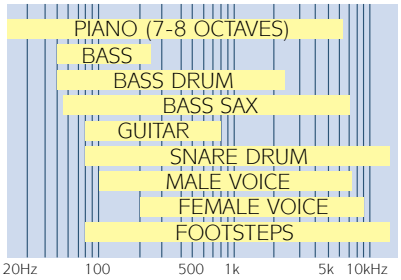

Mid EQ frequency is sweepable on all Spirit mixers (except Notepad)

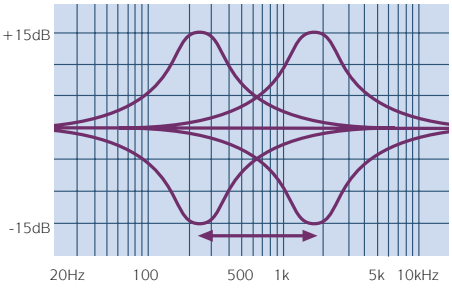

15dB of cut or boost is available at low, mid and high frequencies, giving plenty of control just where it's needed

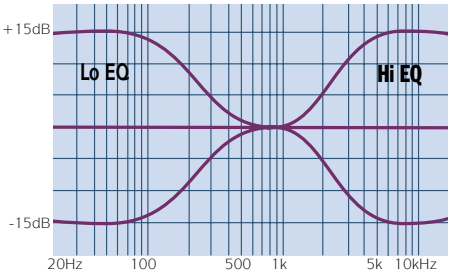

STEREO INPUTS

Most contemporary electronic instruments have stereo outputs, and it's always easier to deal with such a stereo source with a stereo channel. All your EQ and aux changes affect both sides of the stereo signal equally, and the sound remains balanced. Stereo inputs don't always give you facilities such as EQ, but many Spirit stereo channels have 2-band EQ with carefully chosen frequencies that enable effective adjustment in a live or studio environment. On the SX, F1 and FX8, the jack inputs to each stereo channel are supplemented by a second set of inputs on RCA phonos, with a simple level control, providing still more inputs in the compact frames.

THE GREAT BRITISH EQ

The EQ on a mixer's channel strip is both a valuable device for correcting problems and a creative tool in mixing. The EQ circuits on Graham Blyth's larger Soundcraft designs have spawned many imitators, all trying to recreate the warmth and musicality that make the original EQ designs popular with professionals around the world. But why settle for an imitation when you can have the real thing?

Part of the secret is careful positioning of the high and low shelving filters in the classic 3-band configuration. By setting the HF shelving frequency sufficiently high, and choosing the right slope for the filter, the highest band operates without interfering with the swept mid-band, and this ensures a natural sound and more effective combination of frequency bands. Similarly, the LF filter works only on frequencies out of reach of the swept band. Careful positioning of the LF and HF bands also ensures that the frequencies that are cut or boosted are subjectively the most important ones.

The swept mid-band, with its Q (width of the filter bell curve) of 1.5 operates between the high and low bands. By carefully choosing the right centre frequency, Spirit's swept EQ makes it easy to locate and work on a particular frequency range – either to tune out a troublesome noise such as feedback, or boost a range of frequencies to emphasise the character of an instrument.

SPIRIT FEATURES

BUILD QUALITY

Soundcraft's advanced manufacturing ensures that all of these advanced designs are produced efficiently and to the very highest standards. Surface-mount PCB construction means that components can be soldered directly to circuit boards, improving reliability and efficiency, and reducing susceptibility to vibration fatigue.

By allowing more, smaller components to be precisely located on a densely-populated board, surface-mounting also allows more features to be included on compact mixers. Yet another benefit is that it reduces crosstalk, and sources of noise and interference.



DESIGNER TECHNOLOGY

There are some aspects of good mixer design that you can't measure by specifications and figures - such as how easy it is to use. And if it's not easy to use, you'll never get the best out of it. That's why we've always placed great importance on good industrial design. The result is clear control layout, plenty of space for your fingers to work - even factors such as colour choices are considered. This, alongside the electronic excellence of the Soundcraft Spirit range, is probably why we've won so many awards.

BALANCED INPUTS AND OUTPUTS

Balanced audio connections, in which the signal is carried on two wires plus a return screen, are much more resistant to interference than unbalanced signals, and are essential in many professional applications. All Spirit mixers therefore feature balanced inputs and outputs.

Our impedance balanced outputs provide the most cost-effective and technically correct method of preventing external noise and interference from getting into your cables. The more widely-used but cumbersome voltage balancing method gives no useful advantage, and can cause problems unless the output impedances are correctly matched.

All Folio channels feature electronically balanced inputs, enabling both instruments and mics to be connected via a professional balanced interface.

PHANTOM POWER

Condenser microphones are more sensitive, and generally offer better audio quality than, dynamic microphones. But they need power to work, which is why all Spirit mono input channels offer standard +48V phantom powering. Of course you can still use dynamic mics, but most DI boxes or condenser mics that require power will also have the power they need.

CUSTOM CONTROLS

Most manufacturers keep their costs down by using off-the-shelf controls for their mixers. These are invariably not designed for professional audio use, and simply don't work as well as custom designs. A small movement of the control at one end of its travel will produce an unwanted jump in level, whereas the same movement at the other end of the scale might produce only an imperceptible level change.

All Spirit mixers feature custom pots and faders, ensuring that sound quality is matched by a usable, effective interface, giving you the confidence to fine tune a mix effectively. All of our linear faders are 100mm, which means plenty of fader resolution for smooth fade-outs and fade-ins.

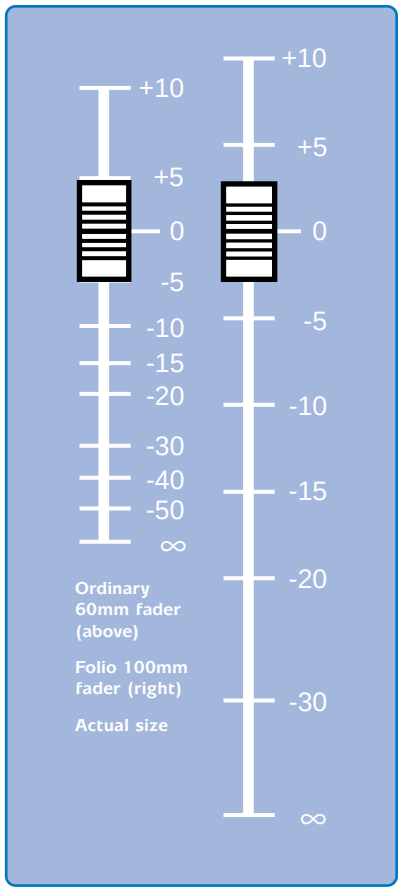

DIRECT OUTPUTS

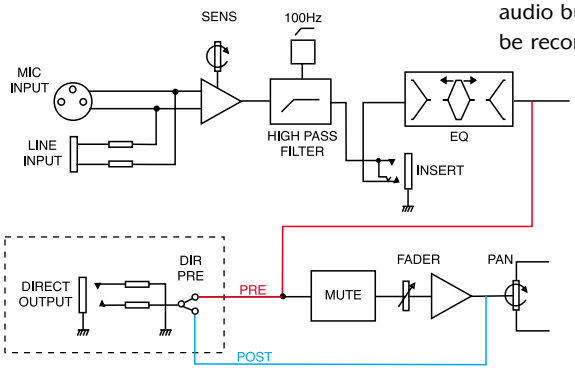

Direct outputs allow the signal from each channel to be sent straight back out of the console as well as into its audio busses. Individual channels can be recorded separately to tape, and you can record on as many tape tracks at once as you have channels. Folio direct outputs can be switched to be either pre-fade or post-fade. The pre-fade signal is the output from the channel EQ but before the mute switch. This allows a multi-track recording to be made independently of a live performance (so that you can mix the show later from the multitrack recording), or allows the faders and pan controls to create a monitor mix during a recording session. The post-fade signal is taken after the mute switch and the fader, and can therefore be used in a live situation to feed an external effects device or allows the level to tape to be 'ridden' by the fader when recording.

SUB-GROUPS

The more inputs you have, the harder it is to control them all in a mix. One way of making things easier is to send sets of channels via a sub-group on their way to the main mix. With Spirit stereo sub-groups, you can group together a set of channels - all of the drum mics, or backing vocals - and mix them via two 100mm faders into the main mix. We often provide dedicated sub-group outputs, so that you can use the sub-group to create an entirely separate stereo mix from the main mix - which means greater flexibility in installed, live or theatre sound. In the studio, sub-groups can also be used for additional tape or hard disk sends.

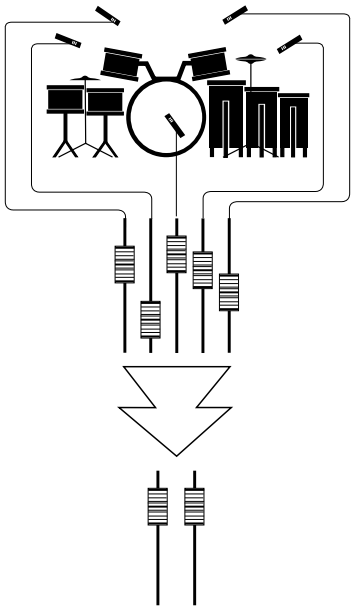

Another use of sub-groups on the FX-16 is to make a drum group on to which you can place an insert compressor or other processing.

LEXICON EFFECTS

Lexicon is widely acknowledged as the first name in digital effects, and Lexicon reverbs take pride of place in live and studio racks all over the world. The Lexicon effects processors built into Spirit mixers feature specially programmed versions of classic reverb, delay and chorus effects, plus combination effects such as reverb plus delay. While it's very convenient to have effects built in to a mixer, it also has another benefit as the signal stays in the console and therefore there's no external cabling to add noise or pick up interference.

Superb audio quality is matched by ease of use. The 16 original presets are selected via a rotary switch, and the easy-edit system lets you modify each preset very quickly.



You can start from any of the 16 presets and easily reach your required effect within a couple of button presses.

Lexicon Effects Table (FX8 and FX16)

Param 1 control	Minimum	Maximum	Program	Description	Param 2 control	Minimum	Maximum
Reverb decay	0.11 mSec	283 mSec	1	Gated Reverb	Timbre	420Hz	19kHz
Reverb time	0.25 Sec	6.5 Sec	2	Chorus + Reverb	Speed	OFF	16 glides
Delay time	No delay	977 mSec	3	Chorus + Delay	Speed	OFF	16 glides
Depth	0.34 mSec	5.8 mSec	4	Large Chorus	Speed	OFF	16 glides
Reverb time	0.25 Sec	6.5 Sec	5	Plate	Timbre	420Hz	19kHz
Reverb time	0.25 Sec	6.5 Sec	6	Room	Timbre	420Hz	19kHz
Reverb time	0.25 Sec	6.5 Sec	7	Chamber	Timbre	420Hz	19kHz
Reverb time	0.25 Sec	6.5 Sec	8	Hall	Timbre	420Hz	19kHz
Delay time	No delay	977 mSec	9	Delay + Bright Plate	Reverb time	0.25 Sec	6.5 Sec
Delay time	No delay	977 mSec	10	Delay + Dark Plate	Reverb time	0.25 Sec	6.5 Sec
Delay time	No delay	977 mSec	11	Echo + Plate	Regeneration	0%	94%
Delay time	No delay	977 mSec	12	Delay + Bright Room	Reverb time	0.25 Sec	6.5 Sec
Delay time	No delay	977 mSec	13	Delay + Dark Room	Reverb time	0.25 Sec	6.5 Sec
Delay time	No delay	977 mSec	14	Echo + Room	Regeneration	0%	94%
Delay time	No delay	977 mSec	15	Delay + Mono Regen	Regeneration	0%	94%
Delay time	No delay	977 mSec	16	Delay + Stereo Regen	Regeneration	0%	94%

16 MIC/LINE INPUT MIXER WITH LEXICON

- 16 Mono UltraMic™ Inputs
- 4 Stereo Returns
- Global 48V Phantom Power
- Lexicon Effects built in
- 3-Band EQ with Swept Mid
- 4-Bus Architecture
- Direct Outs for Multitrack Recording
- 3 Auxes



MAIN FEATURES

- 26 inputs as standard
- 16 mono channels with high quality UltraMic™ pre-amps
- 4 stereo returns
- 4-bus architecture, with sub-group routable to mix
- Built-in Lexicon dual effects processor
- Direct outputs for multitrack recording, individually switchable for pre- or post-fade operation
- Inserts on all mono channels
- Inserts on stereo mix bus
- 3-band 'British' EQ with swept mid-band
- Stereo 18dB/octave 100Hz high-pass filter to cut stage rumble
- +48V phantom power
- Channel Mute control
- 10-segment tri-coloured metering
- Two sub-group outputs
- Separate mono sum output
- Rackmount option (see p24)

The FX16 offers a combination of powerful live and recording features, with enough channels and direct outputs to enable use with 16-track recording systems.

With its 16 mono channels, stereo effects returns and a 2-track return that can be routed to the mix, the FX16 can handle up to 26 inputs simultaneously. Channel direct outputs on all 16 mono channels can be switched pre or post-fader, to feed a multitrack recorder on stage or in the studio.

UltraMic™ pre-amps, plus Spirit 3-band EQ, an effective high-pass filter and full-size 100mm fader equip the mono channels to handle any mic or instrument source. Channels can be routed either to the main or to the Sub stereo bus, and the Sub bus switched into or out of the main mix, which means that complex mixes can be easily set up and controlled. Using the FX16's Sub outputs, you can set up two separate stereo mixes to different sets of speakers, which is particularly useful in more demanding live or installed sound environments.

Live situations are rarely free of sources of noise and interference, which is why the FX16 is built like a tank, and has balanced connections in and out. The relocatable jackfield can be rotated through 90° to suit table-top or rackmount use, saving space and leading cables away in a sensible direction.

A studio-grade Lexicon processor offers a broad range of classic effects treatments, from chorus and reverbs to combinations such as delay + reverb. Effects presets can be edited via a simple but versatile interface, and 16 user variations stored alongside the 16 presets.

As well as the direct outputs, the FX16 also has three aux sends for effects or monitors. Inserts on all mono channels, and on the main and sub busses, are provided to make it easy to patch in vital processors.

"The FX16 is one of the best thought-out compact mixing desks ever".
NIGEL LORD, FUTURE MUSIC

"The direct outputs, comprehensive effects returns and price all blow raspberries at the competition".
NORMAN FAY, THE MIX

APPLICATIONS

Live Sound:
Bands, Small Venues, Clubs, Conferences, Schools, Houses of Worship

Studio Recording:
Digital/Analogue Multitracking (8 or 16 track), Small/Home Studios, Pre-/Post-Production

SEE PAGES 19 - 23

FULL FEATURE DESCRIPTIONS – PAGES 4 TO 7

SPIRIT FX16

MONO INPUTS

Connectors
Neutrik XLR for mics. Phantom Power available globally from the master section (condenser mics). 1/4 inch jack for line level instruments. Mic and line inputs are balanced. Direct Out and Insert point.

Gain Control
UltraMic™ padless preamp provides 60dB of gain range. Maximum 22dBu of headroom.

Equaliser Section
Steep 18dB per Octave 100Hz High Pass Filter.
3-band British EQ with swept mid. ±15dB at Lo 80Hz, Hi 12kHz and Mid variable 240-6kHz. Q = 1.5.
See page 5 for EQ curves.

Auxiliary Section
4 flexible auxiliary controls:
Aux 1 is pre-fader/post EQ for foldback or stage monitor mixes.
Aux 2 and 3 are post-fader/post EQ but Aux 2 is switchable pre-fader on each channel.
LexFX dedicated to Lexicon effects (post-fader).

Pan
To position signal in stereo mix or for subgroup routing.

Routing Section
Any channel can be routed to Mix and/or Sub Outputs. Signal to Auxes, Mix and Sub Out can be muted.

Solo
Monitors the pre-fade signal of a "solo" channel before it reaches the main mix. If SIP is pressed in master section, gives true stereo position, after fader and with effects.

Direct Pre
Allows direct outs to be switched to pre-fader (live recording to prevent multitrack levels from being affected by changes to the FOH mix) or post-fader for studio work.

100mm Fader

GROUP/MASTER SECTION

Connectors are on rear panel – see below.

2-Track Return
Two phono connectors allow playback of master stereo recording or for pre-show music.

Mono Sum Output
Useful as additional bass bin send, side fill feed, mono PA feed or for induction loops.

Monitor Outputs
For nearfield monitors via an amplifier.

Mix Outputs
2 impedance-balanced XLRs send mix signal to PA speakers or a stereo recorder.

Mix Inserts
For processing all signals routed to mix with a compressor/limiter or other device.

Subgroup Outputs
2 impedance-balanced 1/4" jacks send subgroup signal to a multitrack or additional speakers.

Subgroup Inserts
For processing the subgroup signal.





Rear Connector Panel

Auxiliary Outputs
3 impedance-balanced 1/4" jacks send signals to effects units or monitor/foldback amplifiers.

Phantom Power
Supplies +48V globally to power condenser mics. LED indicates +48V active.

Stereo Return Section
4 inputs routable to Mix or Submix, with access to Auxes 1 or 2.

Aux/FX Master Section
4 rotaries govern master levels of Auxes and Lexicon effects. Each master may be solo'd after the fader.

2-Track Return Section
Rotary sets playback level.
Can be routed to Mix.

Monitor Source
Monitor Mix and/or Submix. Press 2TK to play back master recordings without repatching. Rotary controls monitor output level.

Solo in Place (SIP)
Replaces PFL with SIP. LED lights in SIP mode. See "Solo" mode operation.

Meters
Two 3-colour, 10-segment bargraph meters show mix, submix, control room or 2-track levels. Peak reading (PPM). When any PFL, SIP or AFL switch is pressed, meters switch to show solo level.

Phones
For headphones of 200 Ohms or greater impedance. Rotary pot governs output level.

Sub-Mix and Mix Faders
Pressing the "Sub to Mix" switch routes submix buses to the mix. Insert points allow signal processors to be connected across submix and mix.

LEXICON EFFECTS SECTION

Effects Controls
The Lexicon dual effects section provides combinations of delay, reverb and chorus. Each effect has two editable, storable/recallable parameters.
See Lexicon Effects table on page 7.

Programme Select
Select from 16 pre-programmed effects combinations.

Parameter Adjust
Param 1 / 2 alter values of two effect parameters using encoder. Alterations are held in memory when Parameter switch is released; User Mode LED indicates an alteration has been made to factory preset (restorable).

Lexicon Effects Return
Rotary sets Lexicon effects return level, routable to Mix or Sub. Internal effects have access to Aux 1 or 2, allowing you to add reverb to a foldback mix, or to mix external effects with the Lexicon processor to create unique combination effects.

Lexicon Foot Switch
Allows effects to be turned on or off on stage using a guitar foot-pedal.

Soundcraft

8 MIC/LINE INPUT MIXER WITH LEXICON EFFECTS

MAIN FEATURES

- 8 Mono UltraMic™ Inputs
- 4 Stereo Inputs
- Global 48V Phantom Power
- Lexicon Effects built in
- 3-Band EQ with Swept Mid
- 4-Bus Architecture
- Direct Outs for Multitrack Recording
- 3 Auxes

- 18 inputs as standard
- 8 mono channels with UltraMic™ pre-amps
- 4 stereo inputs
- 4-bus architecture, with sub-group routable to mix
- Direct outputs from channels 1 to 8 for multitrack recording
- Direct outputs can be switched globally pre- or post-fade
- Inserts on all mono channels
- Inserts on stereo mix bus
- 3-band 'British' EQ with swept mid-band
- Stereo 18dB/octave 100Hz high-pass filter to cut stage rumble
- +48V phantom power
- Channel On switch for mute control
- 10-segment tri-coloured metering
- Two sub-group outputs
- Separate mono sum output
- Can be rackmounted (option)

These days there's simply no excuse for a live mixer to give anything away to a studio mixer in terms of audio quality. With its combination of live and recording-oriented features, plus all the usual Spirit benefits, the Spirit FX8 is ideal for both stage and studio use, and is particularly suitable for live recording.

Whatever the application, you can add studio-quality digital effects using the built-in Lexicon effects processor. Its 16 preset chorus, delay and reverb effects are selected with a simple control knob, and an easy-to-use interface allows each preset to be quickly edited to create your own custom effects.



All eight mono channels feature an UltraMic™ pre-amp, plus a full-size100mm fader for more accurate and precise mixing. Direct outputs on each channel can be used either as pre-fader multitrack feeds for live recording, or post-fader feeds for tracklaying in the studio. Four pairs of stereo inputs are provided for effects, keyboards or other stereo sources.

All channels can be routed to a true stereo sub bus or to the main mix bus. In this way the levels of several channels into the main mix can be controlled with the sub faders, or you could create a second stereo mix in live or installed use – for a supplementary pair, or array, of speakers. 10-segment LED meters provide precise level monitoring, and remote control of effects switching is possible via a footswitch input.

As well as the internal Lexicon effects send, the FX8 offers two aux sends for outboard effects or monitoring. The internal effects can be routed to the main or sub stereo busses, and also mixed into Aux 1 or Aux 2, to add reverb to a foldback mix.

"The rest of the band have been well impressed with the desk...The effects all sound great and it's very easy to use – I haven't actually looked at the manual yet".

PAUL JONES, CATATONIA

APPLICATIONS

Studio Recording:
Digital/Analogue Multitracking (8 track), Small/Home Studios, Pre-/Post-Production

Live Sound:
Bands, Small Venues, Clubs, Conferences, Schools, Houses of Worship

SEE PAGES 19 - 23

FULL FEATURE DESCRIPTIONS – PAGES 4 TO 7

SPIRIT FX8

MONO INPUTS

Connectors
Neutrik XLR for mics. Phantom Power available globally from the master section (condenser mics). 1/4 inch jack for line level instruments. Mic and line inputs are balanced. Insert point.

Gain Control
UltraMic™ padless preamp provides 60dB of gain range. Maximum 22dBu of headroom.

Equaliser Section
Steep 18dB per Octave 100Hz High Pass Filter.
3-band British EQ with swept mid. ±15dB at Lo 80Hz, Hi 12kHz and Mid variable 250-6kHz. Q = 1.5.

Auxiliary Section
3 flexible auxiliary controls:
Aux 1 is pre-fader/post EQ for foldback or stage monitor mixes.
Aux 2 is post-fader/post EQ but switchable pre-fader/post EQ from the master section. LexFX dedicated to Lexicon effects (post-fader/post-EQ).

Pan
To position signal in stereo mix or for subgroup routing.

Routing Section
Channel can be routed to Mix or Sub Outputs. Muted until the Channel On is pressed.

Direct Pre/Post
Allows direct outs to be switched either pre-fader (live recording to prevent multitrack levels from being affected by changes to the FOH mix) or post-fader for studio work.

PFL Solo
Monitor pre-fade signal of a "solo" channel before it reaches the main mix.

100mm Fader

STEREO INPUTS

Stereo Inputs 9-10 & 13-14
2 simple stereo inputs with phono connectors. Can be routed to Mix or Subgroup, with rotary level control.

Stereo Inputs 11-12 & 15-16
2 balanced line 1/4" jacks. Controls include gain, 2-band EQ (±15dB at 80Hz and 12kHz), and balance. Other controls are same as mic/line inputs.

GROUP/MASTER SECTION

Connectors are at top of Group/Master section. Outputs are impedance-balanced.

Subgroup Outputs
2 1/4" jacks send subgroup signal to a multitrack or additional speakers.

Mix Outputs
2 1/4" jacks send mix signal to PA speakers or a stereo recorder.

Auxiliary Outputs
2 1/4" jacks send signals to effects units or monitor/foldback amplifiers.

Mono Sum Output
Useful as additional bass bin send, side fill feed, mono PA feed or for induction loops.



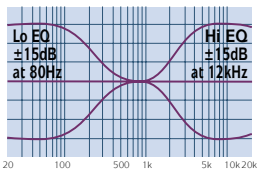

LF and HF EQ curves

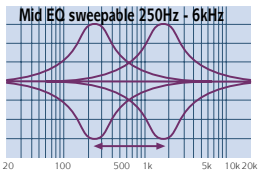

Swept Mid EQ curve

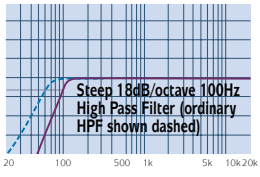

High Pass Filter

Mix Inserts
For processing all signals routed to mix with a compressor/limiter or other device.

Monitor Outputs
For nearfield monitors via an amplifier.

2-Track Return
Two phono connectors allow playback of master stereo recording or for pre-show music.

Lexicon Foot Switch
Allows effects to be turned on or off on stage using a guitar foot-pedal.

Phantom Power
Supplies +48V globally to power condenser mics. LED indicates +48V active.

Meters
Two 3-colour, 10-segment bargraph meters show mix output levels. Peak reading (PPM). When any PFL or AFL solo is pressed, both meters switch to show solo level.

2-Track Return Section
Rotary sets playback level. Pressing 2-TK switch replaces mix signal with tape return signal.

Aux/FX Master Section
3 rotaries govern master levels of Auxes 1, 2 and Lexicon effects. Aux 2 switchable pre/post-fade; each master may be solo'd after the fader.

Sub-Mix and Mix Faders
Pressing the "Sub to Mix" switch routes submix buses to the mix. Dual insert points allow signal processors to be connected across the mix.

Monitor Phones
For headphones of 200 Ohms or greater impedance. Rotary governs output level.

LEXICON EFFECTS SECTION

Effects Controls
The Lexicon dual effects section provides combinations of delay, reverb and chorus. Each effect has two editable, storable/recallable parameters.
See Lexicon Effects table on page 7.

Programme Select
Select from 16 pre-programmed effects combinations.

Parameter Adjust
Param 1 / 2 alter values of two effect parameters using encoder. Alterations are held in memory when Parameter switch is released; User Mode LED indicates an alteration has been made to factory preset (restorable).

Lexicon Effects Return
Rotary sets Lexicon effects return level, routable to Mix or Sub. Internal effects have access to Aux 1 or 2, allowing you to add reverb to a foldback mix, or to mix external effects with the Lexicon processor to create unique combination effects.

LEXICON EFFECTS TABLE – PAGE 7
SPECIFICATIONS – PAGE 25

COMPACT 20-INPUT MIXER FOR LIVE

MAIN FEATURES

- 12 Mono UltraMic™ Inputs
- 4 Stereo Inputs
- Global 48V Phantom Power
- Channel Mute
- 3-Band EQ with Swept Mid
- 4-Bus Architecture
- Direct Outs for Multitrack Recording
- 3 Auxes

- 20 inputs as standard
- 18 outputs including aux and direct outputs
- 12 mono channels with high quality UltraMic™ pre-amps
- 4 stereo inputs
- 4-bus architecture, with sub-group routable to mix
- Direct outputs from channels 1 to 8 for multitrack recording
- Direct outputs can be switched globally pre- or post-fade
- Inserts on all mono channels
- 3-band 'British' EQ with swept mid-band
- Stereo 18dB/octave 100Hz high-pass filter to cut stage rumble
- +48V phantom power
- Channel On switch for mute control
- Two sub-group outputs
- Separate mono sum output
- Impedance balanced XLR outputs
- Rugged aluminium chassis with integral carry handle
- Excellent protection against RF emissions
- Rackmount option

Controlling more inputs in more complex mixing environments is hard work – that's why the 20-input Spirit SX has a true stereo sub-group. By routing groups of channels to this sub-group and then routing it to the main mix bus, you can control a set of instrument levels within the main mix, or use it independently to feed a second set of stereo speakers in a live situation.

The SX has 12 mono channels for mic or line sources, each with an UltraMic pre-amp, classic 3-band British EQ with a swept mid band, and a 100mm fader for precise level control. Direct outputs are provided for recording, and these can be switched pre-or post fade to suit live or studio use. Three auxes – one pre, one post, and one switchable – can be used for live monitor or studio effects sends, and each channel can be routed to the main or the sub stereo busses. Two stereo channels each accept an RCA stereo input and a second pair of jack inputs with 2-band EQ, aux sends and main/sub routing.



"... Spirit SX seems such a bargain I feel I should have one".
BOB DORMAN, THE MIX

The SX is well-equipped with outputs – as well as the main and sub mix outputs, each fed via 100mm faders for precision control, there's a mono sum output, stereo monitor outputs, and the three aux sends. Insert points on the mono inputs and the stereo mix bus allow compressors and EQs to be patched in, and 2-track inputs are provided for playback.

And just to make sure that the SX really is as versatile as possible, its rugged frame incorporates a convenient carry handle, and rackmount ears can be fitted for touring, installed and studio use.

"I can't think of all that many PA jobs I've ever done where this desk wouldn't have coped easily".
MIKE CROFTS, SOUND ON STAGE

APPLICATIONS

Live Sound:
Bands, Small Venues, Schools, Conferences, Houses of Worship

Studio Recording:
Digital/Analogue Multitracking (4/8 track), Small/Home Studios, Pre- and Post-Production

Submixing

Location Sound

SEE PAGES 19 - 23

FULL FEATURE DESCRIPTIONS – PAGES 4 TO 7

SPIRIT SX



MONO INPUTS

Connectors
Neutrik XLR for mics, with Phantom Power available. 1/4 inch jack for line level instruments. Mic and line inputs are balanced. Insert point.

Direct Out
Globally switchable pre- or post-fader (Channels 1 to 8).

Gain Control
UltraMic™ padless preamp provides 60dB of gain range. Maximum 22dBu of headroom.

Equaliser Section
Steep 18dB per Octave 100Hz High Pass Filter.
3-band British EQ with swept mid. ±15dB at Lo 80Hz, Hi 12kHz and Mid variable 250-6kHz. Q = 1.5.

Auxiliary Section
3 flexible auxiliary controls:
Aux 1 is pre-fader/post EQ for foldback or stage monitor mixes, with Aux 3 set post-fader/post EQ as an effects send.
Aux 2 is post-fader/post EQ but switchable pre-fader/post EQ from the master section.

Routing Section
The Pan control positions the signal in the stereo image. Channel is muted until the channel ON switch is pressed. Channel can be routed to Mix or Submix. PFL switch allows you to solo the channel pre-fader.

100mm fader

STEREO INPUTS

4 stereo inputs in two channel strips:

Inputs A and C
Two unbalanced phono connectors. Level control, Mix/Submix routing.

Inputs B and D
Two balanced line jacks for balanced or unbalanced stereo source. Can be used as mono channels by connecting a signal to the left jack only.
Gain control, 2-band EQ (±15dB at Lo 80Hz and Hi 12kHz), Balance control, Mix/Submix routing, PFL.

MASTER SECTION

Phantom Power
Switch for global +48V phantom power on/off. LED indicates +48V active.

2 Track Return
Two unbalanced phono connectors. 2TK LEVEL rotary controls playback levels.

Monitoring
Two impedance balanced 1/4 inch jacks for connection to an amplifier and monitor speakers. Monitor Mix, Submix, any Solo or 2-Track Return through monitor outputs or phones.

Meters
Two 3-colour, 10-segment bargraph meters show mix output levels. Peak reading (PPM). When any PFL or AFL solo is pressed, both meters switch to show solo level.

Auxiliary Masters
3 rotary controls govern the output levels from the impedance-balanced auxiliary outputs. Each master can be solo'd using AFL switch. Pre/Post button switches all Aux 2 signals between post- and pre-fader.

Mono Output
Impedance balanced 1/4 inch jack provides a mono sum from the mix. Rotary control alters output level.

Submix Outputs
Two impedance-balanced 1/4 inch jacks with 100mm faders. For recording a group of instruments or for controlling a separate amp/speakers in a live setup.

Mix Outputs
The MIX L & R outputs are taken from two impedance balanced XLR connectors, with two insert points available. Mix level governed by two 100mm faders.

Phones
For headphones of 200 Ohms or greater. Rotary control for headphone volume or monitor outputs.

GENERAL

Integral handle
Integral handle which doubles as a tilt for the control surface.

Power Connector
Latched for reliability.

Rackmount Option
Optional rackmount ears available. Occupies 10U of rack space (additional 1U is advised for cables).

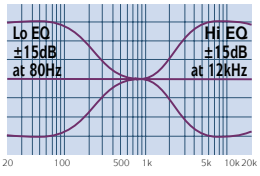

LF and HF EQ curves

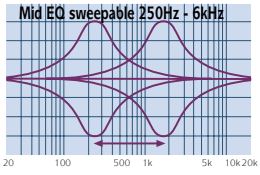

Swept Mid EQ curve

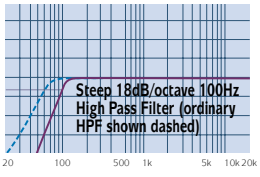

High Pass Filter

SPECIFICATIONS – PAGE 25

MAIN FEATURES

- Effective grounding eliminates noise and crosstalk
- 3-band EQ with swept mid band
- Integrated S/PDIF digital output
- High quality, linear mic preamps with smooth gain control



- 4, 8, and 12-mono input channel frame sizes
- 18dB/octave high-pass filter
- 4 aux sends, 2 pre-fade and 2 post-fade
- 4 stereo returns
- 4 stereo inputs
- 100mm faders
- Internal power supply
- Integral rack mounting





In a world full of cheap compact mixers, Soundcraft has achieved something exceptional with the Spirit M Series. Suited to a wide range of live sound applications, the Spirit M Series delivers a great-sounding, reliable performance, gig after gig, mix after mix. A mixer for life.

Sonic integrity through design

Through a fresh and innovative approach, Soundcraft designers have created a mixer that rivals the sonic performance of many high end live consoles. Attention to detail in the design of the Spirit M Series makes mixing a positive pleasure. A no-compromise approach to circuit design and to the quality of the components throughout has resulted in a console that delivers exceptionally low noise and crosstalk figures. Mic and line inputs are provided on balanced XLR and 1/4" jack connectors for optimum performance, with the main stereo outputs on balanced XLRs for better integration with other professional equipment. There are also insert points on every mono channel and the mix outputs for external signal processing.

Built for all eventualities

Live sound reinforcement requires different mixes – a stereo master mix for the audience and one or more monitor mixes for the performers on stage. The monitor mixes can be set up using Aux 1-4 on the M Series mixer. When a venue uses multiple fill speakers, delay should be added to speakers that are closer to the listener.

The direct outputs on the Spirit M Series can be used to record each of the mono input channels to a multitrack recorder. Each direct output can be individually switched to be pre-fade, ensuring the signal at these outputs remains unaffected by any movements of the channel faders during the live performance. Different mixes of the performance can then be made after the event.

Integral rack mounting

Through integral rack ears, the M Series can be quickly transformed into a rack-mounted desk suitable for use on the road. All three mixers in the range occupy 11U of standard rack space.

Comprehensive monitoring control

Because levels are constantly changing throughout the signal path – from the preamp stage, through filtering and EQ – the Spirit M Series provides signal detect and peak LEDs on all input channels. These monitoring LEDs are fed from multiple points in the circuit path to ensure nothing gets overlooked. The main stereo mix has two 12-segment LED meters, with a SOLO AFL/PFL indicator to show whether any solo channels or aux masters are being monitored. With all this information instantly available, efficient control is easy to maintain.

Switchable direct outputs

Use a single console for your live mix and recording. Switchable direct outputs enable the pre-fade signal to be sent directly to the recorder regardless of the fader settings used for the live mix, allowing total post production flexibility.

APPLICATIONS

- Digital audio workstation front-end
- Public address
- Small PA hire
- Multi-speaker systems
- PA mixing for bars, schools, leisure centres, etc
- Conferencing
- Small-medium size band mixing

SEE PAGES 19 – 23

FULL FEATURE DESCRIPTIONS – PAGES 4 TO 7

CONTROLS & CONNECTIONS

SPIRIT M SERIES

MONO INPUTS

Direct Out (switchable)
For connection to external multitrack recorders or effects units.

Mic Input
A balanced female XLR connector accepts balanced or unbalanced mic signals. At -128dbu EIN the mic amp is extremely quiet and transparent.

Line Input
A balanced 1/4" jack for connecting balanced or unbalanced electronic instruments, such as keyboards.

Insert
For patching in compressors or additional EQ or for other signal processors. It can also be used for recording.

Gain
A rotary gain control on each input alters the gain of the input signal, from +5 to +60dB. Linear circuitry within the preamp delivers smooth gain control over the entire gain range.

Filter Section
A high pass filter with an 18dB per octave slope can be used to reduce frequencies below 100Hz. Ideal for reducing unwanted stage rumble or popping from microphones.

EQ Section
Equalisation is split into three bands. The HF control provides 15dB of cut or boost (gain adjustment) for frequencies above 12kHz. Two swept mid frequency controls enable frequencies from 240Hz to 6kHz to be adjusted, offering 15dB of cut or boost at the selected frequency. Signals below 60Hz can be adjusted with the LF control, which features ±15dB of gain adjustment (cut or boost).

Auxiliary Section
For sending separate monitor mixes in live applications, four aux busses, with two pre-fade and two post-fade aux sends on each input channel cater for all requirements.

Pan, Muting, PFL & Direct Pre
The pan control positions each channel's signal across the stereo image, with a mute button to cut the signal completely. A PFL (Pre Fade Listen) button solos the signal for monitoring. The Direct Pre button selects the direct outputs to be pre-fader.

Faders and Metering
Each mono channel features a smooth 100mm fader, a signal LED to show whether a signal is present and a peak level LED indicating signal levels in excess of +17dBu.

STEREO INPUTS

Input Connectors
The stereo inputs are connected via balanced 1/4" jack inputs delivering optimum performance with other professional audio equipment.

Stereo Returns
Stereo returns for effects processors are via RCA phono inputs – these returns can also be used with CD players and other hi-fi equipment.

EQ Section
Equalisation on the stereo channel strip is simpler than the EQ featured on the mono channels. There are two controls, adjusting HF signals at 12kHz and LF signals at 60Hz by ±15dB.

Auxiliary Section
With 4 aux sends on the stereo input channels, the signal can be sent pre-fade for use in a monitor mix (using aux sends 1 & 2) or sent post-fade (via aux sends 3 & 4) for effects processing.

Bal, Muting, PFL & Direct Pre
The balance control adjusts the amount of the signal sent to the left and right busses. Mute and PFL buttons operate as on the mono input channels, cutting or soloing the stereo channel. With PFL pressed, the pre-fade signal is fed to the headphones, control room output and meters, with levels displayed on the left and right meters in mono to enable levels to be monitored without interruption to the main mix.

RETURNS CONTROLS

Gain Control
Positioned at the top of each stereo channel strip, adjusts the gain
for each stereo return, with a peak signal LED indicating when the signal exceeds +17dBu.

Return Master
Adjusts the overall level of the stereo returns in the main mix.

Mute Button
When stereo returns are used to return a signal from an effects unit, the mute button offers a fast method of comparing your mix with or without FX.



Faders and Metering
Each stereo channel features a smooth 100mm fader, a signal LED to show whether a signal is present and a peak level LED indicating signal levels in excess of +17dBu.

CONNECTOR PANEL

MASTER SECTION

Phantom Power
Global control over phantom power is offered via a push button. When active, an LED will illuminate.

2-Track Inputs
2-track recorder playback inputs are on unbalanced RCA phonos.

Monitor Output and Mix Insert
Available on balanced 1/4" jacks.

Mix Outputs and Mono Sum
The main left and right mix outputs are provided on balanced XLR connectors with a mono sum signal available on a balanced 1/4" jack.

Playback Level
The playback gain control adjusts the level from the 2-track playback inputs. This playback signal can be monitored separately by pressing the PFL button, which routes it to your monitoring system or to the headphones, replacing any existing monitoring signals. The 'P/B Replace Mix' button routes the playback signal directly to the main mix, replacing any signal that may be present.

Mono Sum, Monitor & Phones Level
Levels sent to the mono sum output, monitor output and headphones can be adjusted using these three rotary controls. And when a pair of headphones are plugged into the phones socket at the bottom right of the mixer, the monitor outputs are cut for easier headphone listening.

Auxiliary Masters
The aux output contains a mix of the aux send signals sent from each input channel, which can then be sent as a monitor mix to stage loudspeakers or to send to an external effects unit.
Each aux bus features a master level control, with an AFL (After Fade Listen) button enabling monitoring of each aux output. When pressed, the AFL button routes the aux output to the monitor ouputs or to the headphones, where it can be monitored on the master stereo meters.

Faders and Metering
Controlling the overall stereo mix level are two 100mm faders, with two 12-segment 3-colour LED peak-reading bargraph meters monitoring the mix right and mix left outputs. These meters normally follow the current monitor selection, so if any PFL or AFL is pressed, the meters will switch to monitor this and the Solo AFL/PFL LED will light.

Soundcraft

SPECIFICATIONS – PAGE 25

MAIN FEATURES

- Multi-point signal channel status monitoring (post-Mic pre, post-EQ, post-fade) with proportional illumination
- Close tolerance surface-mount components for high accuracy repeateable EQ
- Precision, ultra-linear mic pre-amps
- True, professional +48V phantom power for condensor microphones
- Professional insert points for external processing

- 6, 8 and 12 mono input channel frame sizes, each with two stereo inputs
- ES version has 10 full-function stereo inputs and 4 mono inputs
- 2 aux sends, each globally switchable pre- or post-fade
- 100 mm faders
- Internal power supply
- Simple rack mounting options



Looking for a simple, easy to use mixer that delivers an exceptional audio performance? The Spirit E Series is here. For recording, live, install or broadcast use there's a Spirit E Series for you.

Sonic integrity through design

The emphasis with the Spirit E Series is very firmly on quality audio performance, with an easy to understand control surface uncluttered by unnecessary facilities. Mic and line inputs are provided on balanced XLR and 1/4" jack connectors for optimum performance, with the main stereo outputs on balanced XLRs for better integration with other professional equipment. There are also insert points on every mono channel and the mix outputs for external signal processing.

Catering for today's stereo environment

With so many stereo sources needing simultaneous connection and mixing, we've given you a mixer that can cope. The ES model has ten full-function stereo inputs with 3 band EQ as well as four mono mic/line inputs, so you'll have all the inputs you need without constant re-patching. You'll also be able to plug in record turntables so you can include DJ production in your mix.

Rack mounting options



Through additional rack ears, the E Series can quickly be transformed into a rack-mounted desk suitable for use on the road or in custom furniture. All four mixers in the range occupy just 9U of standard rack space.

Comprehensive monitoring control



Because levels are constantly changing throughout the signal path — from the preamp stage, through filtering and EQ — the Spirit E Series provides peak LEDs on all input channels. These monitoring LEDs are fed from multiple points in the circuit path to ensure nothing gets overlooked. The main stereo mix has two 10-segment LED meters, with a SOLO indicator to show whether any solo channels or aux masters are being monitored. With all this information instantly available, efficient control is easy to maintain. The LEDs also employ proportional illumination to show signal level when approaching peaks. This feature allows you to maximise the quality of any signal by utilising all of the available headroom.

APPLICATIONS

- Quality audio mixing of any source for recording
- Multiple stereo source mixing and recording (ES)
- PA mixing for bars, schools, leisure centers etc
- Live keyboard submixing (ES)
- Small-medium size band mixing
- Public Address
- Multiple speaker installations

SEE PAGES 19 - 23

FULL FEATURE DESCRIPTIONS – PAGES 4 TO 7

SPIRIT E SERIES

MONO INPUTS (E and ES Models)

Mic Input
A balanced female XLR connector accepts balanced or unbalanced mic signals. At -128dbu EIN the mic amp is extremely quiet and transparent.

Line Input
A balanced 1/4" jack for connecting balanced or unbalanced electronic instruments, such as keyboards.

Insert
Used for patching in compressors or additional EQ or for other signal processors. It can also be used for recording to multi-track recorders if necessary.

Gain
A rotary gain control on each input alters the gain of the input signal, from +5 to +60dB. Linear circuitry within the preamp delivers smooth gain control over the entire gain range.

EQ Section
Equalisation is split into three bands. The HF control provides 15dB of cut or boost (gain adjustment) for frequencies above 12kHz. Two swept mid frequency controls enable frequencies from 140Hz to 3kHz to be adjusted, offering 15dB of cut or boost at the selected frequency. Signals below 80Hz can be adjusted with the LF control, which features ±15dB of gain adjustment (cut or boost).

Auxiliary Section
For sending separate monitor mixes in live applications, or for use with fx units two aux sends on each input channel cater for all requirements. Each Aux bus can be globally switched to be pre or post fade on the master section.

Pan, Muting, and SOLO
The pan control positions each channelís signal across the stereo image, with a mute button to cut the signal completely. A SOLO button solos the signal for monitoring.

Faders and Metering
Each mono channel features a smooth 100mm fader, and a peak level LED indicating signal levels in excess of +17dBu.

STEREO INPUT (E6, 8 and 12 models)

Input Connectors
The stereo inputs are connected via balanced 1/4" jack inputs delivering optimum performance with other professional audio equipment.

EQ Section
Equalisation on the stereo channel strip is simpler than the EQ featured on the mono channels. There are two controls, adjusting HF signals at 12kHz and LF signals at 80Hz by ±15dB.

Auxiliary Section
With 2 aux sends on the stereo input channels, the signal can be sent pre-fade or post-fade according to master selection, for use in a monitor mix or for effects processing.

Bal, Muting, and PFL
The balance control adjusts the amount of the signal sent to the left and right busses. Mute and SOLO buttons operate as on the mono input channels, cutting or soloing the stereo channel. With SOLO pressed, the prefade signal is fed to the headphones, control room output and meters.

Faders and Metering
Each stereo channel features a smooth 100mm fader, and a peak level LED indicating signal levels in excess of +17dBu.





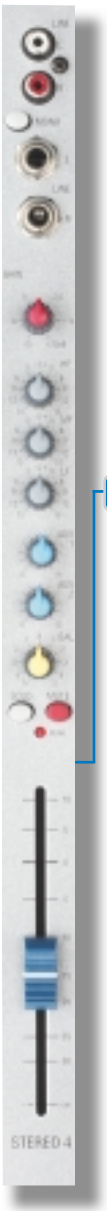

MASTER SECTION

Phantom Power
Global control over professional +48V phantom power is offered via a push button. When active, an LED will illuminate.

2-Track Inputs and Outputs
2-track recorder playback inputs and record sends are on unbalanced RCA phonos.

Monitor Playback routes the playback input to your monitoring system or to the headphones, replacing any existing monitoring signals.

Plyback to Mix routes the playback signal directly to the main mix, replacing any signal that may be present.

Monitor Output and Mix Insert
Available on balanced 1/4" jacks.

Mix Outputs and Mono Sum
The main left and right mix outputs are provided on balanced XLR connectors.

Playback Level
The playback gain control adjusts the level from the 2-track playback inputs.

Monitor & Phones Level
Levels sent to the monitor output and headphones can be adjusted using these two rotary controls. And when a pair of headphones are plugged into the phones socket at the bottom right of the mixer, the monitor outputs are still operational for simultaneous listening by a performer and engineer.

Faders and Metering
Controlling the overall stereo mix level are two 100mm faders, with two 10-segment 3-colour LED peak-reading bargraph meters monitoring the mix right and mix left outputs. These meters normally follow the current monitor selection, so if any PFL or AFL is pressed, the meters will switch to monitor this and the Solo AFL/PFL LED will light.

STEREO INPUT (ES Model)

The full-function stereo input on the ES has the same line input gain, auxiliary and fader controls as the standard E Series stereo input, but has an enhanced connectivity set and EQ section.

ES Stereo Input Connections
Each stereo input has a balanced 1/4" jack for connecting line level balanced or unbalanced electronic instruments, such as keyboards. Stereo inputs 1-2 also feature RIAA-equalised inputs on RCA Phono connectors for turntable inputs. Stereo inputs 3-6 also have parallel unbalanced RCA Phono inputs for line level signals.

EQ Section
Equalisation is split into three bands. The HF control provides 15dB of cut or boost (gain adjustment) for frequencies above 12kHz. A Mid control offers 15dB of cut or boost at a frequency of 600Hz. Signals below 80Hz can be adjusted with the LF control, which features ±15dB of gain adjustment (cut or boost).

Soundcraft

SPECIFICATIONS – PAGE 25

SPIRIT Notepad



If ever a mixer deserved to be called "small but perfectly formed", it's the Spirit Notepad that earned the title. Despite its ultra-compact size and very affordable price tag, the Notepad comes with the same professional pedigree as all Spirit mixers, and is packed with enough features to handle a surprisingly wide range of mixing tasks.

Notepad squeezes into its sub-250mm wide frame an amazing 10 inputs, designed to handle everything from phantom-powered studio condensor mics to DJ decks and samplers. Its high-quality components and advanced design ensure CD-quality sound, while its ergonomic layout makes the Notepad very easy to use. And even on the smallest Spirit, as well as essential features such as separate mix and monitoring outputs, you get custom-built pots designed to give the same precision control and carefully-tailored responses that grace the biggest Soundcraft desks. However you look at it, the Spirit Notepad is the most fully-featured small mixer in town.

MAIN FEATURES

- 4 Mono Inputs
- 2 Stereo Inputs
- Global 48V Phantom Power



- 10 inputs
- 4 mic inputs
- 2 stereo inputs
- High-quality mic pre-amp inputs
- 2-band EQ on all 4 mono channels
- Post-fade aux send on every input
- Stereo effects return
- Switchable +48V phantom power
- Stereo inputs with switchable RIAA pre-amps for turntables
- 2-track tape return
- Separate mix and monitor outputs
- Peak and VU metering
- Headphone output
- Compact, lightweight design
- Power on indicator
- Custom designed rotary controls for consistent, accurate response

"A definite winner".
NICK SERRE, THE MIX

"Represents a new breed of pro audio product".
FRANK BEACHAM, PRO AUDIO REVIEW

"What the Notepad does well, it does magnificently...It's a winner".
DAVID ETHERIDGE, MUSIC MART

APPLICATIONS

- Small PA Setups: Bars, Schools, House of Worship etc
- Personal Practice Mixing
- DJ Mixing; Sub-Mixing
- Location Mixing
- Video Post Production
- Multimedia; Home Studios

SEE PAGES 19-23

MONO INPUTS

Connectors
Four inputs for mics or instruments. High quality preamps with XLR connectors for mics and 1/4 inch jacks for electronic instruments. 50dB of gain available.

Controls
Each channel has a Pre-Amp Level control to match input levels, Treble and Bass controls (Hi and Lo EQ), a post-fader Effects Send level control, a Pan control to position the signal in the stereo image and a Volume (Level) control.

STEREO INPUTS

Connectors
Two pairs of phono inputs will accept signals from most line-level sources and, using the associated switch, stereo turntables (activates internal RIAA preamp).

Controls
Each channel has a Pre-Amp Level control to match input levels, a post-fader Effects Send level control, a Balance control to set relative levels of left and right signals and a Volume (Level) control.

MASTER SECTION

Master Mix (Out)
Two 1/4 inch jacks for sending main mix to a PA system or stereo recorder (e.g. DAT, cassette deck or CD-R). Volume (Level) control.

Monitor Amp (Out) & H/Phones
Two phono connectors for amp/speakers and a stereo 1/4 inch jack for headphones (200 ohms or greater impedance) to monitor signals before they go to the Master Mix. Volume control on rotary pot.

Tape (In)
Two phono connectors for stereo playback of recordings. Volume (Level) control.

Master Mix / Tape Switch
Switches between the Master Mix and Tape (In) signals.

FX Section
One 1/4 jack for sending a signal out to an effects unit (FX Send) and two 1/4 jacks to accept the return signal. Volume (Level) control for return signal.

Mic Power
Provides +48V phantom power for condenser mics. Warning LED.

Metering
Amber AVG (Average) indicators show normal signal levels; red PK (Peak) indicators warn of overload.

OPTIONS

Mic Stand Adaptor
Allows Notepad to be fitted to a microphone stand.

Whatever the application – studio recording, live mixing or live recording – a mixer invariably does the same basic job of combining and routing several signals at once.

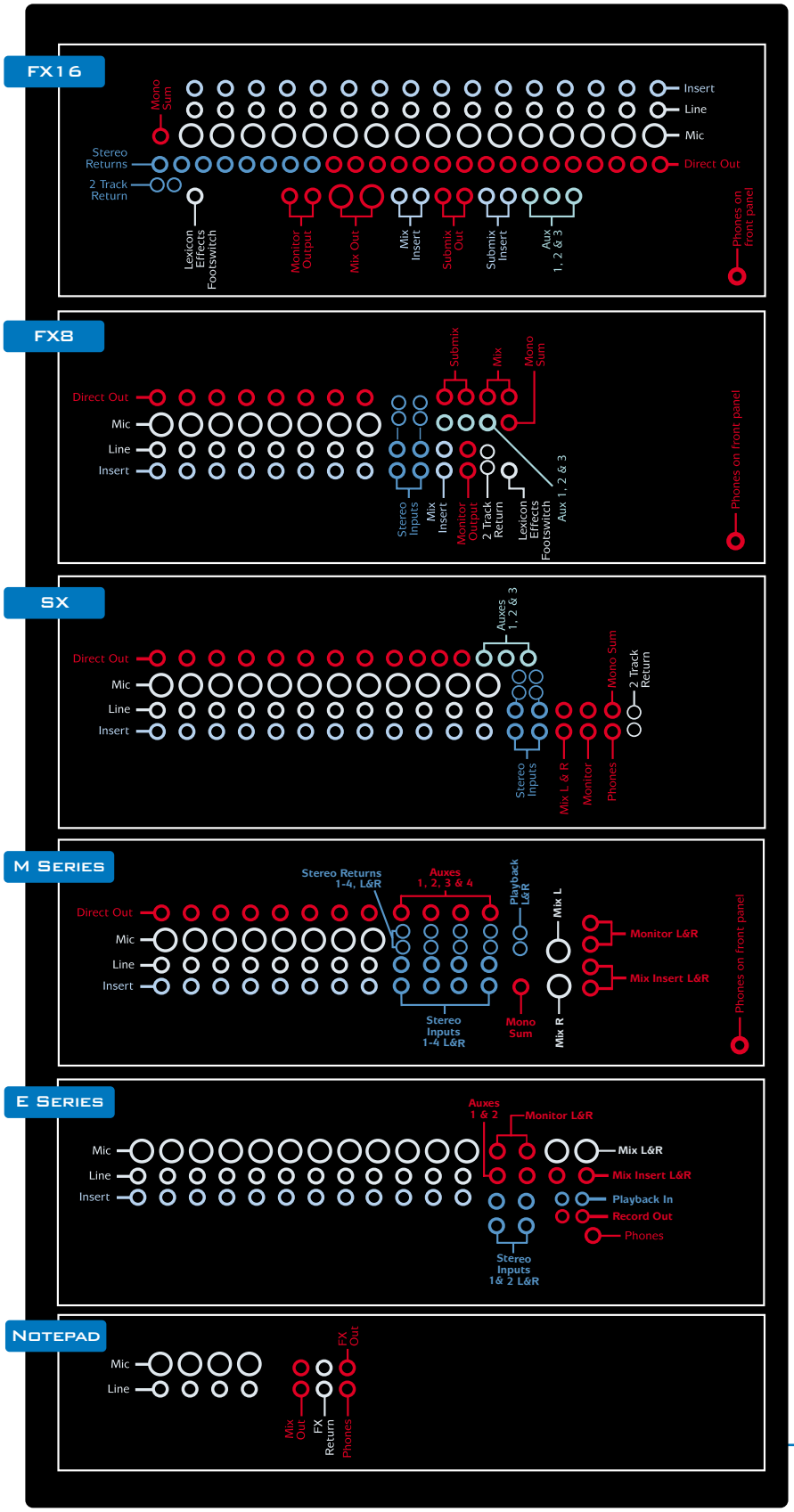

But in situations as different as mixing a band in a small bar, sound reinforcement in a large church hall, or recording in a compact studio, this basic job comes with widely varied additional requirements. Some situations require very specific features – mixing a turntable with other sources calls for RIAA pre-amps, for example – whereas others require basic mixer features such as auxiliary sends to be used in particular ways. In the studio, they are generally used to route signals through a choice of several effects processors, whereas in live use the aux sends are more useful to provide essential monitor mixes for artists.

The diagrams on the following pages are intended as guides for how Spirit consoles can be used in typical audio applications. We've suggested how instruments, microphones and processors can be connected, and which outputs are suitable for amplifiers, monitor sends and so on, but these are only suggestions.

While it's important to stick to certain basics – getting inputs and outputs mixed up is usually a bad thing – the requirements of a particular situation could mean that you connect equipment up in a different manner to anything we've shown here. Use these examples as starting points, and adapt them to the particular situation. When you run out of stereo inputs for keyboards, use two mono channels instead – just remember to use identical EQ settings on both channels. And remember: getting to know your mixer properly makes any task a whole lot easier…

Connector Panels

On the following pages, you will see suggested applications and the connections from each item of equipment to Soundcraft Spirit mixers. The illustrations on the left show you exactly where all of the connectors for each mixer are located so that you can use them as guides for connecting up your equipment.

SPIRIT APPLICATIONS

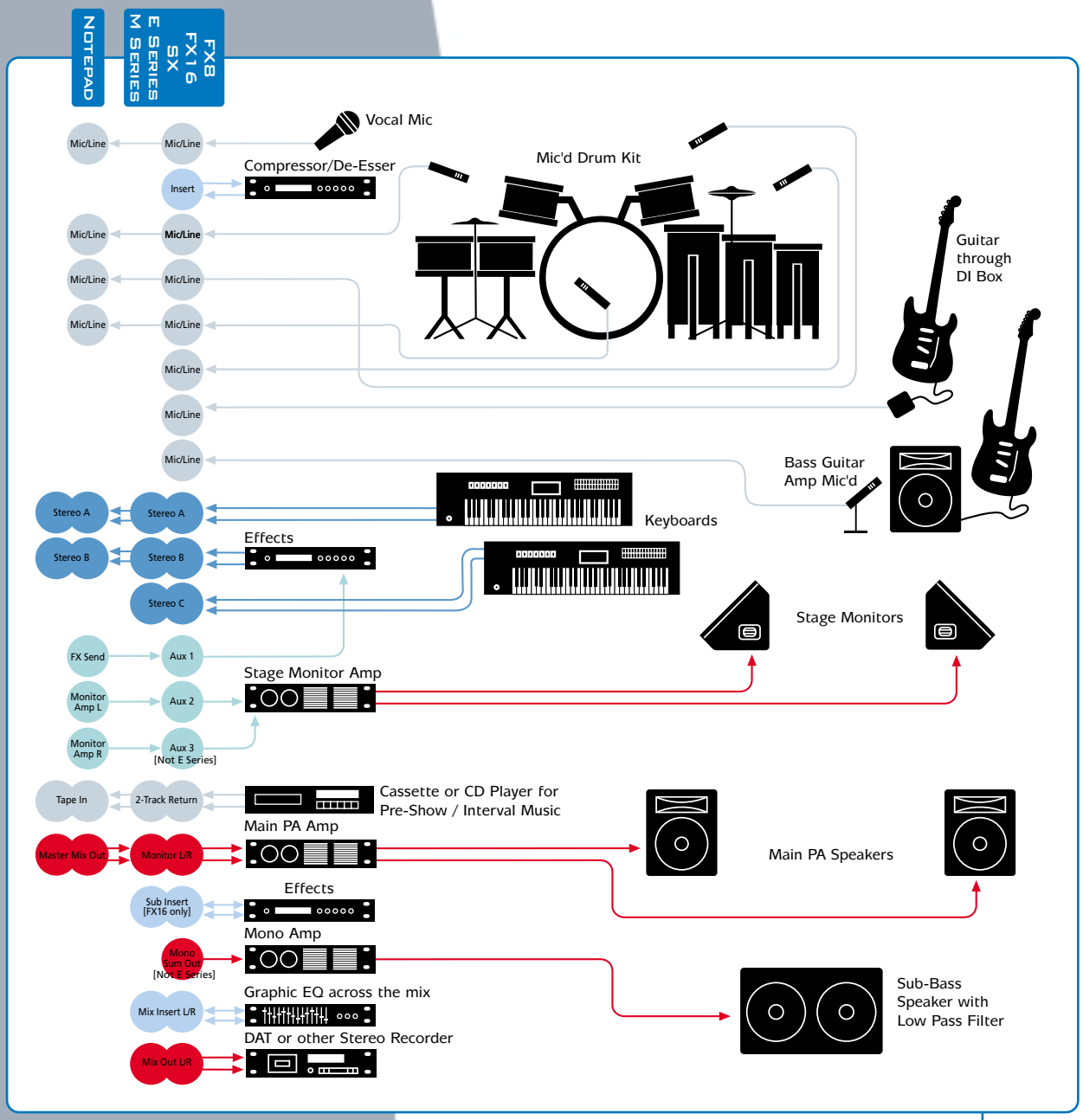

LIVE MIXING

Several different mixes are often required in live sound – a main stereo mix for the audience, and one or more monitor mixes for artists. Remember that pumping more volume in to a room tends to make any acoustic problems worse, and that radical EQ settings make feedback more likely.

KEY TO CONNECTIONS

The connections shown in these applications have been colour-coded to assist viewing.

- Mono Inputs
- Stereo Inputs
- Inserts
- Auxes
- Outputs

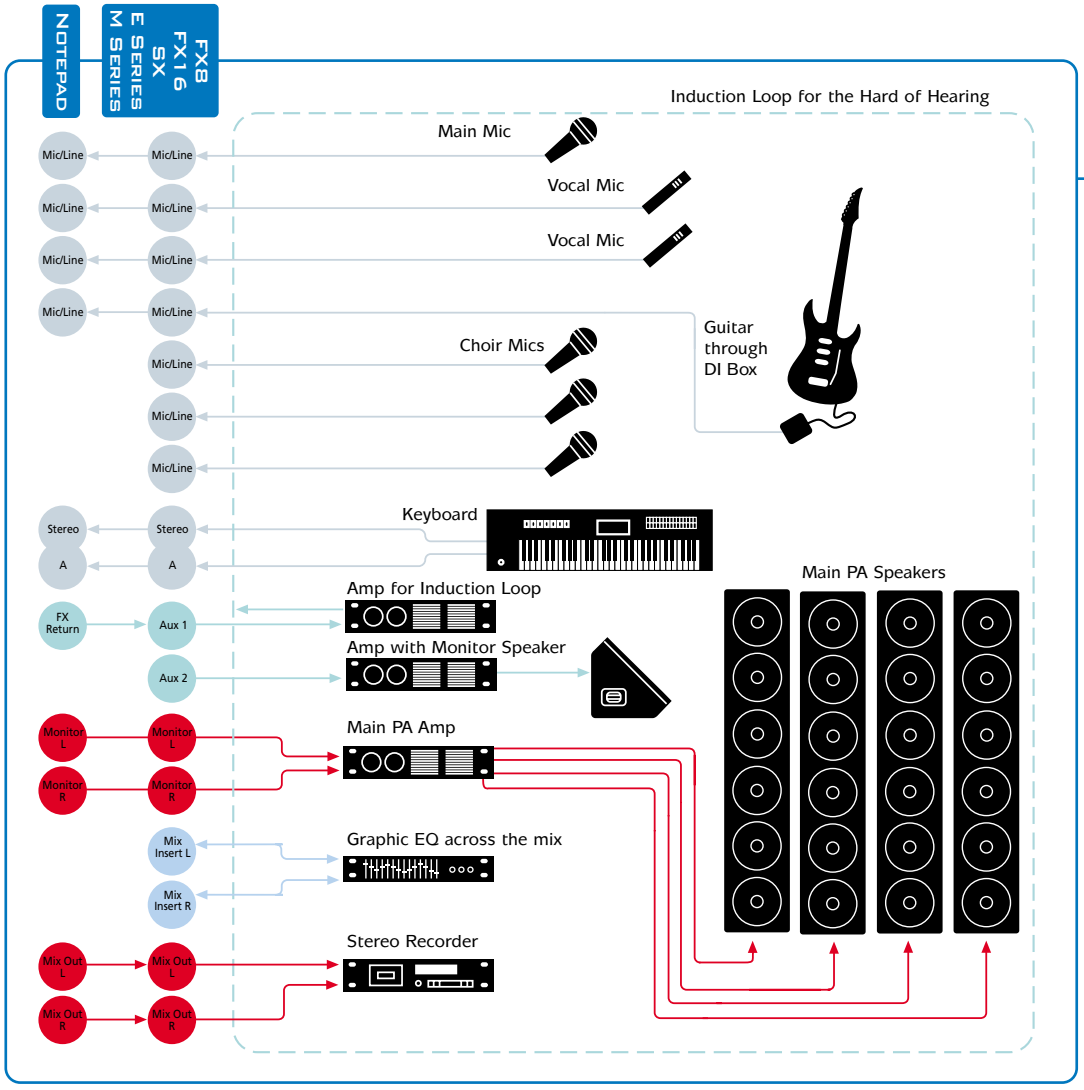

Houses of Worship

As in live music mixing, a graphic equaliser across the main outputs can be very effective in correcting room acoustics (every hall or room tends to boost or cut some frequencies relative to others).

Remember that the more mics you use, the more chance there is for feedback or amplifying unwanted noise, so mute all unused channels.

Installed Sound

Using aux outputs, rather than any form of signal splitter, means that sound levels in different areas of a building or installation can be independently controlled.

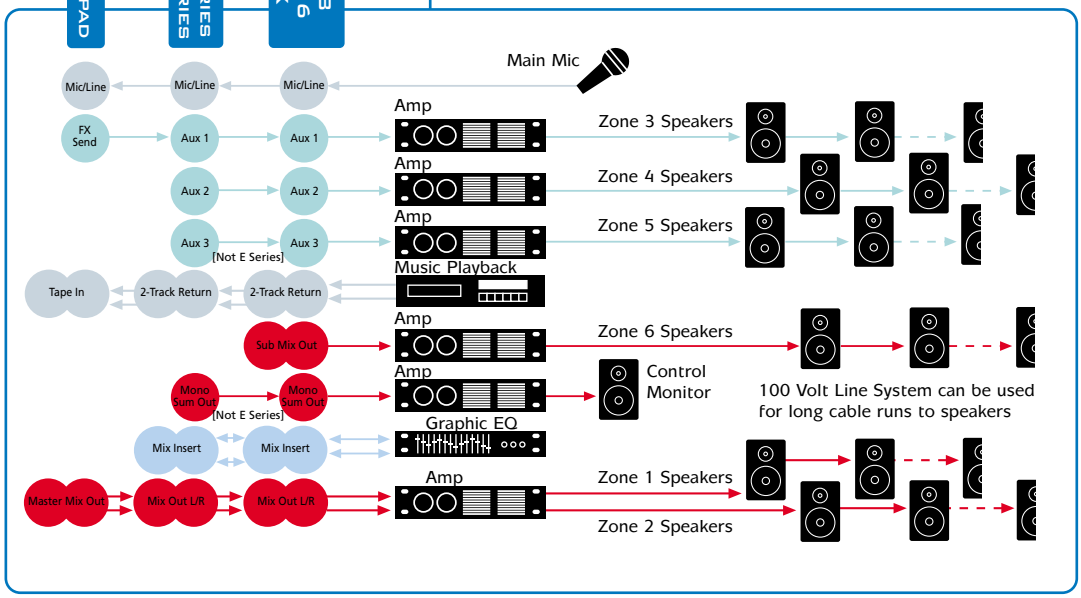

SPIRIT APPLICATIONS

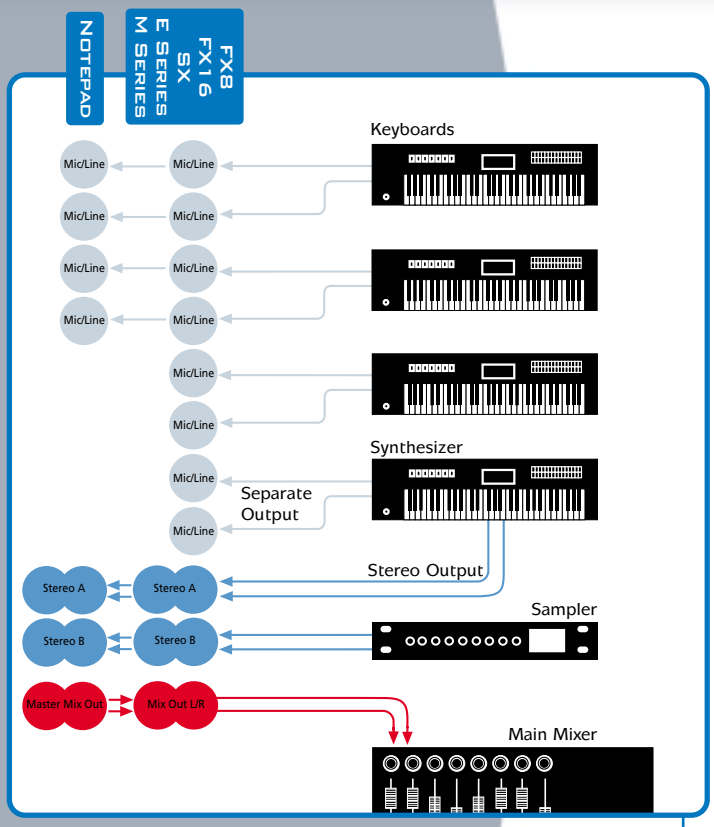

SUBMIXING

If you're running out of inputs on your main mixer, a sub-mixer is an excellent way of adding however many extra channels you need.

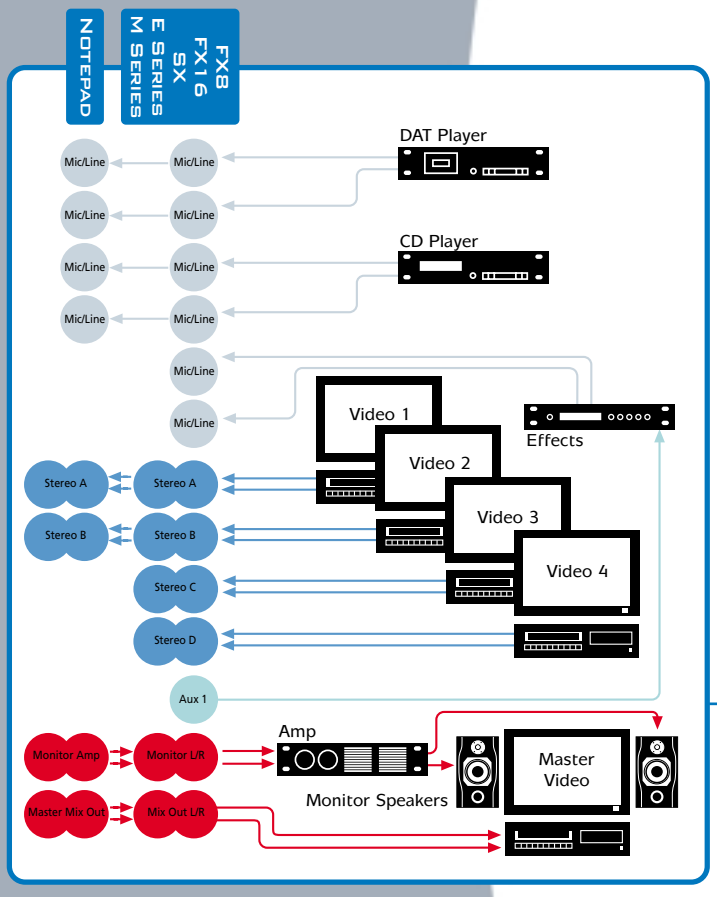

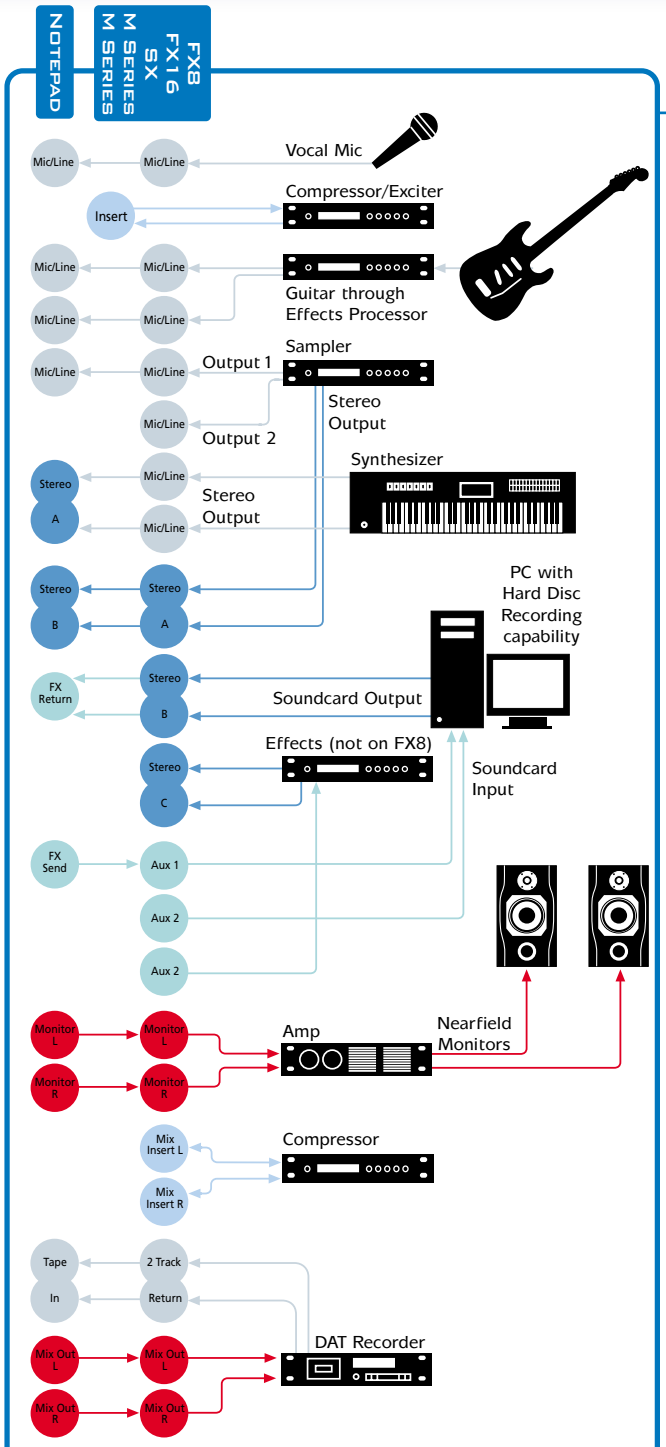

VIDEO EDITING

A clean signal path and compact size are often more important in video editing and post applications than a wide array of features. Good EQ is valuable however, either to correct for problems in recording, or to make several video sequences sound more similar.

Small/Home Studio Recording

Most small studios employ computer-based digital recording systems. Although we've shown stereo inputs and outputs, most hard disk systems will allow multitrack recording, sub-mixing digitally to a stereo output. Using aux rather than main outputs allows the input levels to the soundcard to be set independently of the monitoring levels, and ensures that feedback through the card is avoided.

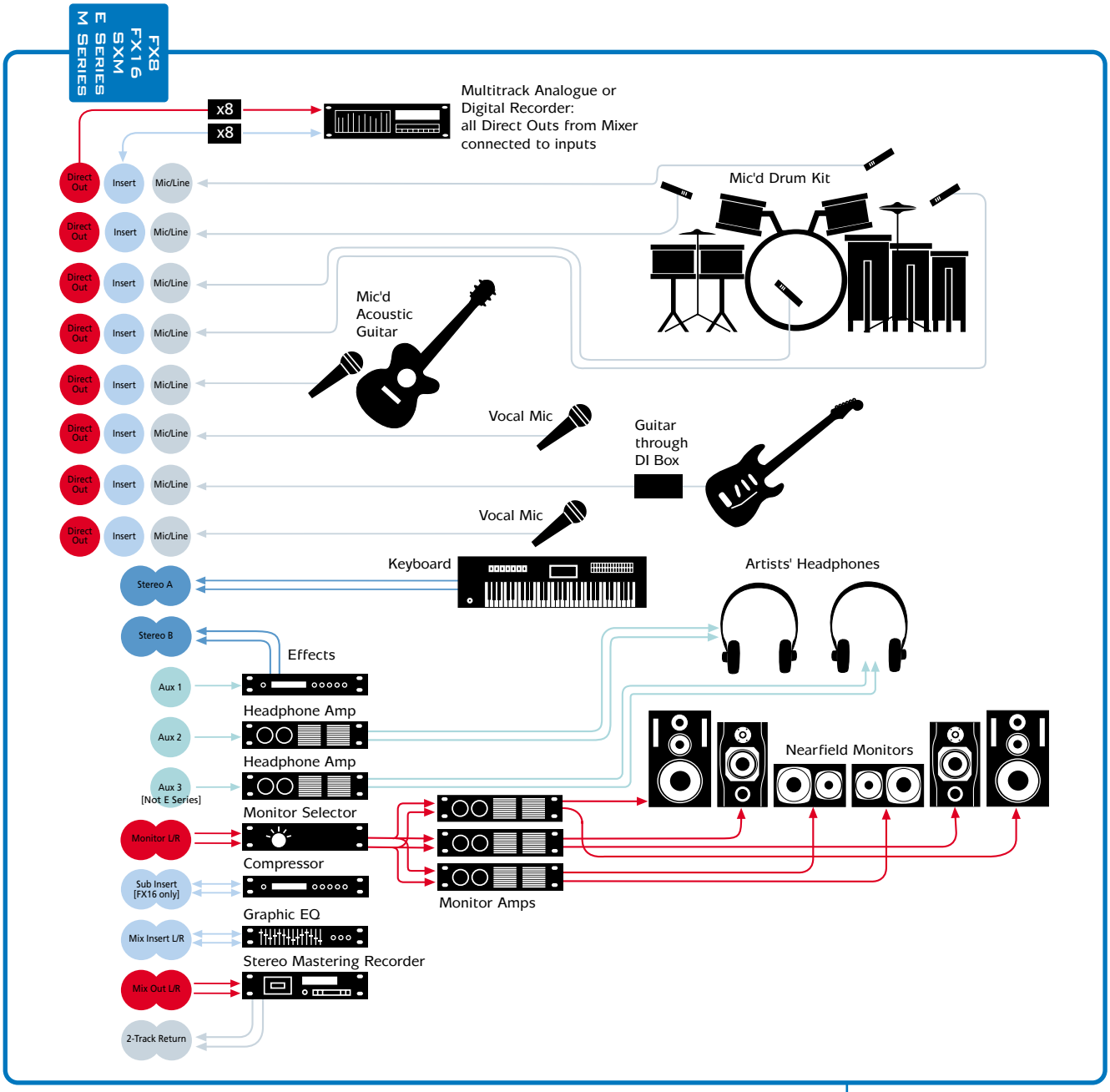

Studio Recording

There are few hard and fast rules in the studio; if it sounds right, it is right. Although for simplicity we've shown three mics on the drum kit, you might use a simple hung stereo pair, or multi-mic the entire kit. When recording vocals, avoid unwanted pops by using a fine mesh in front of the mic.

Soundcraft

DIMENSIONS

NOTEPAD

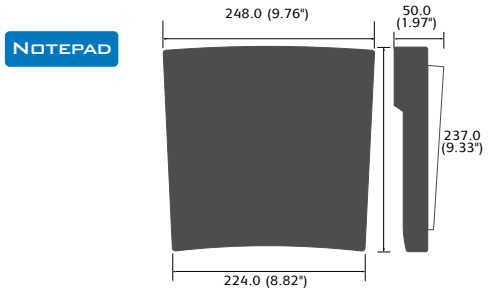

FX16

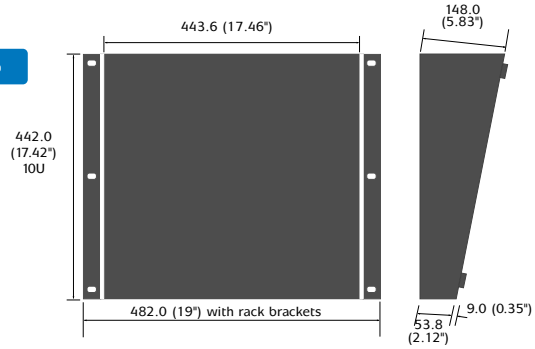

FX8

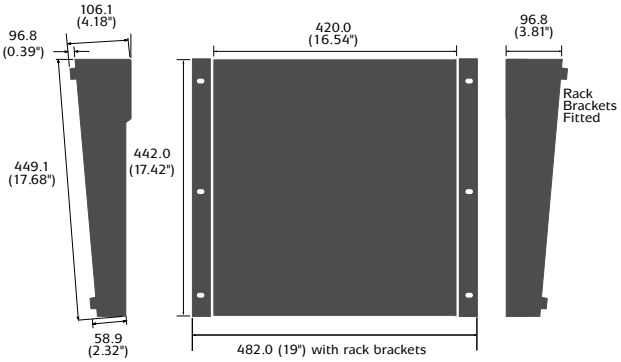

EQ Bands (mono inputs) ±15dB.	Lo Mid (swept) Hi Q
EQ Bands (stereo inputs)	Lo Hi
High Pass Filters	Frequency Slope

Noise
Mic EIN @ max gain, 150Ω source impedance
Aux, Mix & Masters @ max, faders down

Crosstalk (typical, @ 1kHz)
Channel Mute
Fader Cut-off (rel 0 mark)
Routing Isolation
Aux Send Pots offness

Frequency Response
Mic/Line Input to any output

THD & Noise
Mic Sensitivity -30dBu, +14dBu
@ Mix output @ 1kHz

Input & Output Impedances (Z)
Mic Input
Line Input
Stereo Inputs – A, B / C, D
Outputs

Input & Output Levels
Mic Input max level
Line Input max level
Stereo (Return) Input max level
Headphones (@ 200Ω)

Weights
Weight including power supply

SX

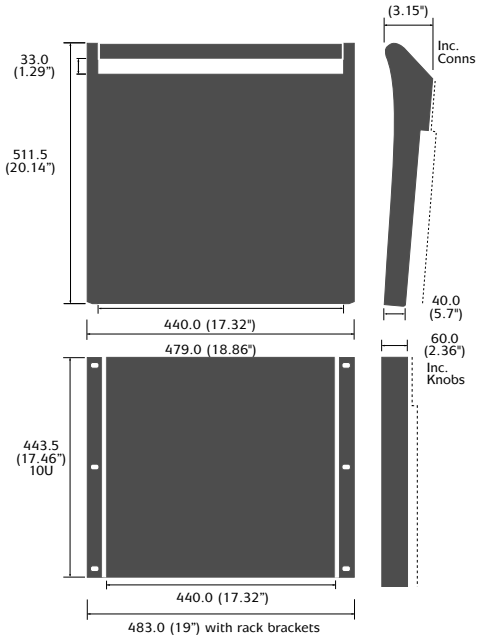

M 4

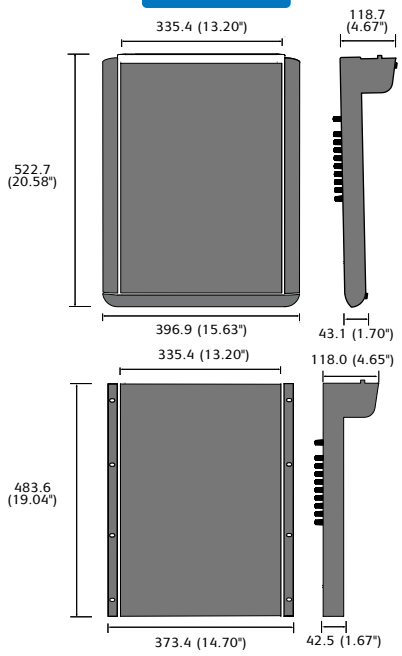

M 8 / M 12

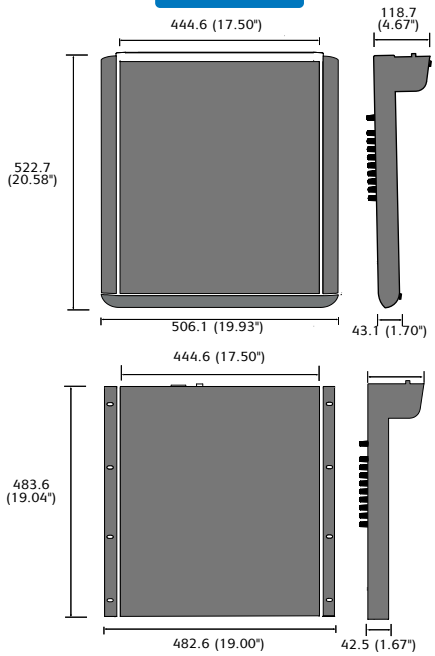

FX16	FX8	SX	M Series	E Series	Notepad
80Hz 240Hz-6kHz 12kHz 1.5	80Hz 250Hz-6kHz 12kHz 1.5	80Hz 250Hz-6kHz 12kHz 1.5	60Hz 240Hz-6kHz 12kHz 0.77	80Hz 140Hz-3kHz 12kHz 1.5	
N/A N/A	80Hz 12kHz	80Hz 12kHz		80Hz (Mid 600Hz, ES) 12kHz	
100Hz 18dB/Octave	100Hz 18dB/Octave	100Hz 18dB/Octave	100Hz 18dB/octave		
-129dBu <-80dBu	-129dBu <-85dBu	-129dBu <-85dBu	-128dBu <-84dBu	-128dBu <-85dBu	-128.5dBu -80dBu
>96dB >90dB >90dB >84dB	>96dB >90dB >90dB >80dB	>95dB >90dB >90dB >85dB	>90dB >90dB >90dB	>96dB >96dB >86dB	>90dB >90dB
±0.5dB 20Hz-30kHz	±0.5dB 20Hz-20kHz	±1dB 20Hz-30kHz	±1dB 20Hz-20kHz	±0.5dB 20Hz-20kHz	±1dB 20Hz-20kHz
<0.009%	<0.009%	<0.006%	<0.008%	<0.007%	<0.005%
1.8kΩ 10kΩ N/A 75Ω	1.8kΩ 10kΩ >10kΩ / - 75Ω	1.8kΩ 10kΩ 12kΩ /10kΩ 75Ω	-2kΩ >40kΩ >30kΩ 75Ω	2.4kΩ 11kΩ 100kΩ 75Ω	1.8kΩ 20kΩ 20kΩ / - 75Ω
+22dBu +30dBu +30dBu 150mW	+22dBu +30dBu +30dBu 150mW	+22dBu +30dBu +30dBu 150mW	+12dBu +38dBu +21dBu 150mW	+17dBu +30dBu +30dBu 300mW	+14dBu +30dBu
11.2kg / 24.6lb	8.0k /17.6lb	7.2kg/15.8lb	M4: 6.75kg /14.8lb M8: 8.25kg /18.1lb M12: 8.55kg /18.8lb	E6: 5.75kg /12.68lb E8: 6.75kg /14.88lb E12/ES: 7.75kg /17.09lb	1.9kg / 4.2lb

E6

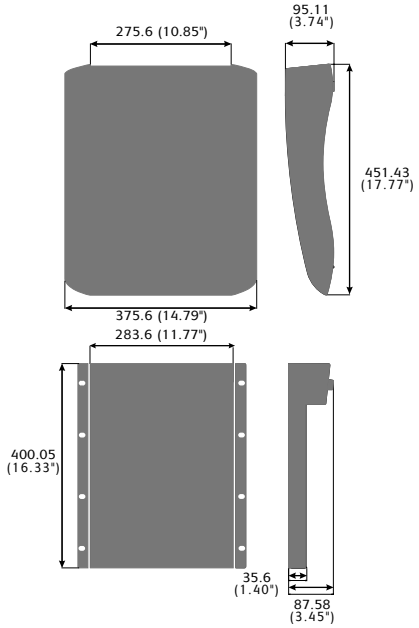

E8

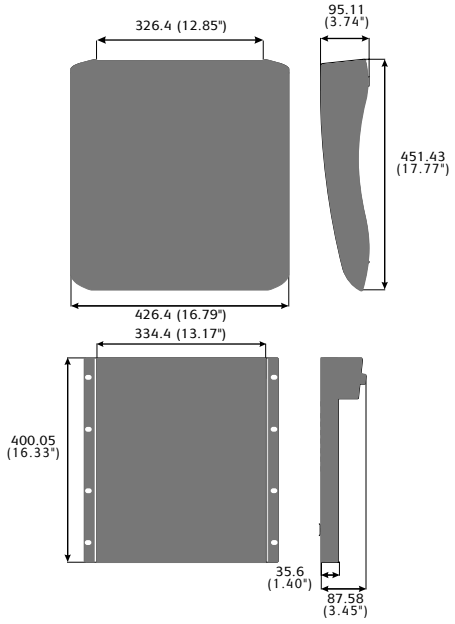

E12/ES

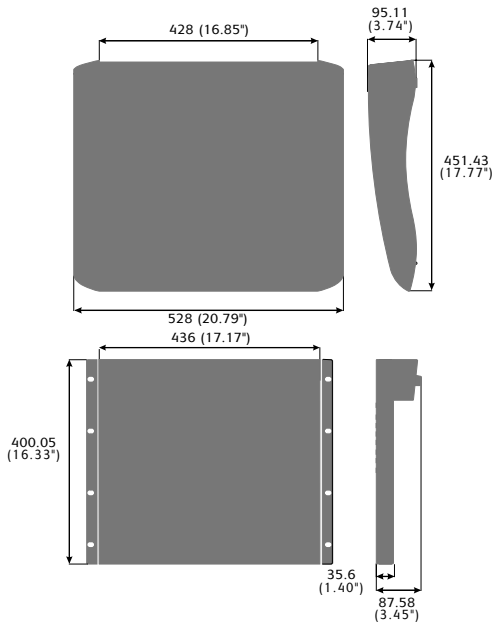

FREQUENTLY ASKED QUESTIONS

What are the maximum and minimum input levels to the mic and line inputs?

The maximum levels are: +22dBu for UltraMic™ preamp inputs (i.e. mic inputs on all Spirits apart from the Notepad), +14dBu for the Spirit Notepad mic inputs, and +30dBu for all line inputs.

There is no minimum level – but remember that the lower your input level, the more noise will be noticeable. The noise floor of UltraMic™ inputs is around -150dBu, so any signal at this level will be effectively lost.

What cables should I use to connect my Spirit?

The best you can afford! Cheap cables will have poor quality connectors that will be more likely to give trouble (such as crackle and buzz) than good connectors. Also, good cables will offer higher audio quality and better rejection of interference, particularly over long runs.

What are the maximum output levels of the different outputs on Spirit desks?

+21dBu.

What is the typical output noise on a Spirit model?

-80dBu at the master outputs, with the master fader at max.

What is an auxiliary send?

An auxiliary send, usually abbreviated to aux send or aux, is an extra output from a mixer that can carry a quite separate balance of sources to that sent to the master outputs. In the studio aux sends are used mainly for patching effects processors in, by sending an aux mix to a effects unit and then returning the processed signal to the desk. Auxes are also useful for setting up on-stage monitor mixes at gigs, for multi-speaker mixing in installed sound, and for routing signals to samplers in programming/MIDI suites.

What are the nominal output levels of the different outputs on Spirit desks?

+4dBu for the mix, aux and group outputs, and 0dBu for insert points and direct outputs (where they are present).

What is a 2-track return?

2-track return is a very important input, as it is there mainly to accept the output from your studio master recorder. Suppose you're mixing down a recording, and running your final mix to DAT. You have the Spirit's Mix outputs connected to the DAT inputs, and the DAT outputs to the 2-track return on your Spirit. If your DAT recorder allows off-tape monitoring, turn this on. By switching from Mix to Tape monitoring on the Folio's master section, you will hear the master recording a split-second after it has been laid down to tape, and will therefore know immediately whether there is any problem in the all-important master.

What is a ground-compensated output?

Ground-compensation (or ground-cancelling) is an electronic means of avoiding ground loops even where the receiving equipment has unbalanced inputs. Unwanted noise is rejected by the addition of signals at the output end of the connection rather than subtraction at the input, in such a way that any differences in ground voltage between input and output are negated.

How should I wire up insert and other cables for my Spirit?

Here are diagrams to show how some standard leads should be made up.

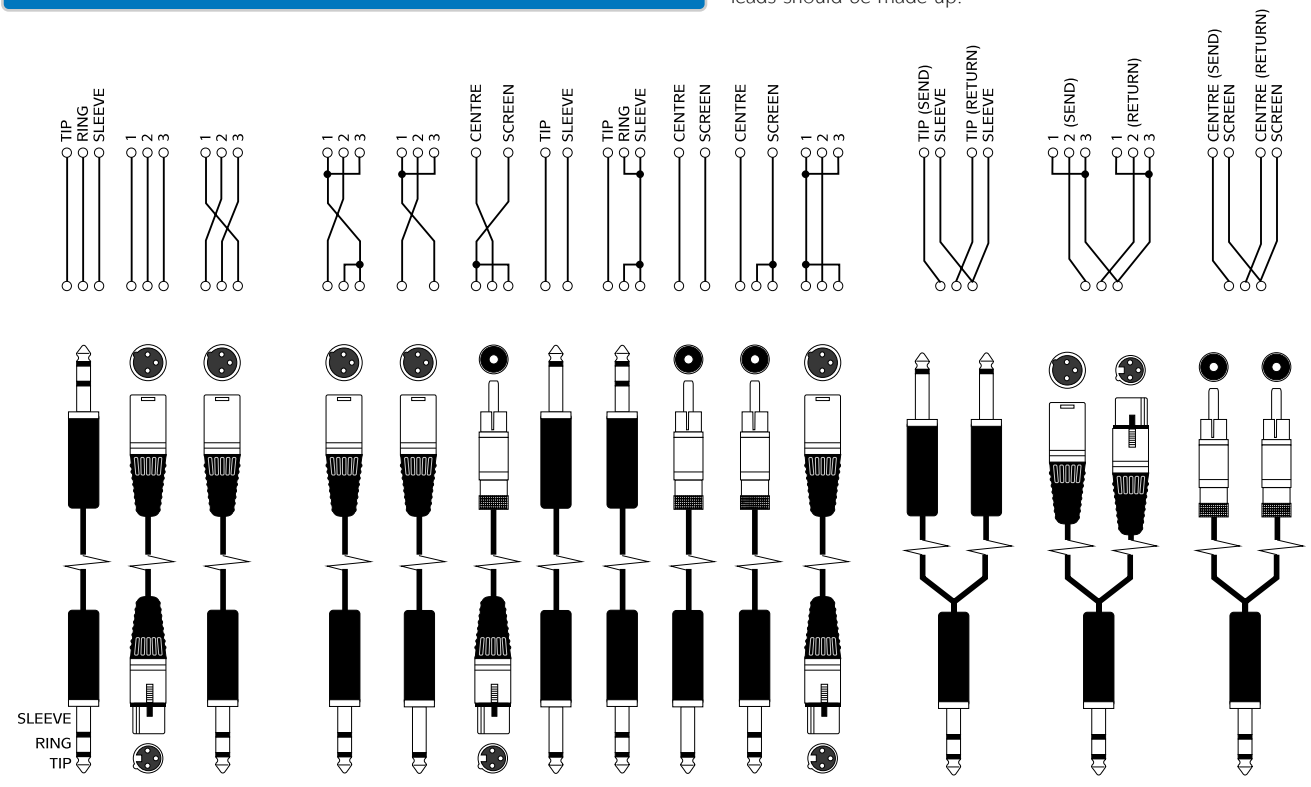

BALANCED
Line, Mix L&R, Sub L&R, Aux, Stereo Inputs

UNBALANCED
Direct Output, Control Room L&R, Stereo Inputs

INSERT LEADS
Mono Inserts, Mix L&R Inserts

AFL (After Fade Listen)
A solo function that sends the post-fade signal of a channel to the monitor output.

Attenuate
Another way of saying 'reduce in level'.

Auxiliary output
An output consisting of a mix of signals (from channels and sub-groups) derived independently of the main stereo and sub-group mixes. Auxiliary sends can be used for foldback and for effects sends.

Balance
On a stereo channel, the balance control is used to vary the relative levels of the left and right signals into the stereo mix bus.

Balanced
A method of audio connection which balances the sound signal between two wires and a screen which carries no signal. Any interference is picked up equally by the two wires, but the signal on one wire is out of phase with the other, which means that when they are recombined the interference is rejected.

Condenser Mic
A microphone that uses a capacitor to convert air movements into electrical signals. They require power, which can be supplied by the Phantom Power found on Folio desks.

DAT (Digital Audio Tape)
A cassette-based digital recording format.

dB (decibel)
A ratio of two voltages or signal levels. A change in level of 3dB corresponds to a perceived doubling of volume to the human ear. 0dB means no level change.

DI box
A device that enables an instrument with a low-level output, such as a guitar or bass, to be connected directly to the line level input of a mixer.

Dynamic Range
The ability of equipment (such as a Spirit console) to reproduce very quiet and very loud sounds – the greater the range, the better.

Equaliser
A device that allows selected bands within the audio spectrum to be boosted or cut.

FX Unit
Slang term for effects unit, either a dedicated processor such as a digital reverb or delay, or a multi-effects processor which can produce many different effects. Effects are usually connected so that the processed sound can be mixed back in with the unprocessed sound in the mixer. See also 'outboard'.

Foldback
On stage or in the studio, a feed sent back to an artist via loudspeakers, headphones or in-ear monitors, to enable them to hear the sound they are producing. A foldback mix is usually similar to the main mix, but with more vocals or a particular instrument as appropriate.

Front Of House (FOH)
In live sound, FOH refers to the sound and parts of the sound system provided for the audience – the main system, in other words. See 'Monitoring'.

Gain
Amplitude above a given level. Negative gain means a signal reduction.

Gate
Short for noise gate. An electronic device that mutes the signal path when the input signal drops below a threshold level. They are used to maintain silence in pauses in the signal, such as in between vocal phrases or drum hits, when noise might otherwise become noticeable.

Graphic equaliser.
An equaliser with small faders (or programmable 'virtual' faders in software) that cut or boost the level of narrow bands of the audio spectrum. Mainly used to compensate for imperfect room acoustics, especially live.

High Pass Filter (HPF)
An electronic circuit designed to filter out frequencies below the filter's cut-off point. If this is set just above deep bass frequencies, it removes only these from a signal, and is useful for stopping low-frequency rumble from on-stage mics from muddying a mix.

Impedance
For good audio performance, the impedance of audio outputs should be low, and input impedances should be very high.

Line level
A nominal standard signal level used when connecting one piece of audio equipment to another. There are two line levels in use: +4dBu, the 'professional' level, and -10dBV, which is more commonly used in semi-professional and consumer audio equipment.

Monitoring
The act of listening to an audio signal over loudspeakers or via headphones. In live sound, monitoring also refers to any separate mix for speakers placed on-stage so that the musicians can hear themselves properly (see FOH).

Monitor loudspeakers
Or monitors. Accurate loudspeakers used to make critical judgements about a mix.

Multicore
A cable with multiple cores, allowing several signals to be carried independently but within the same physical casing. Used extensively in live sound to carry signals to and from the stage, and in studios for linking multitrack recorders to mixing consoles.

Near-field monitor
A compact monitor speaker designed to be used at a distance of three or four feet. By listening in the near field (hence the name), any effects of poor room acoustics are minimised.

Outboard processors
Strictly speaking, any effect or other processor – but the term more usually refers to processors such as compressors, equalisers or exciters, through which a channel or mix bus signal passes. Compressors and equalisers are usually connected to a mixer via insert points, which break the internal signal path so that it can be routed out and back via the outboard.

Pan
Short for panorama. Controls the levels sent to the right and left outputs or bus.

Phantom power
This is a way of adding voltage to a condensor microphone or active DI box, to power the internal amplifier circuits without the need for batteries.

Phase
A term used to describe the relationship of two signals. In phase signals reinforce each other, out of phase signals produce cancellation.

Unbalanced
A method of audio connection which uses a single wire and the cable screen as the signal return. This method does not provide the noise immunity of a balanced connection (see Balanced above).

Unity Gain
A level where a signal is neither boosted nor cut.

...AND BEYOND

328XD



32 Ch Digital Mixing Console

ABSOLUTE



Range of Professional Nearfield Monitors

324 LIVE



32 Ch Digital Live Sound Mixing Console

SPIRIT 8



16 to 40 Ch 8-Bus Live Mixing Consoles

LIVE 4²



A Range of 8 to 40 Ch Live Mixing Consoles

LX7

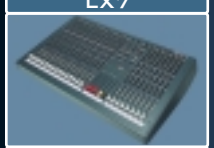

24 to 40 Input Live Mixing Consoles

MONITOR 2



24 to 40 Ch Stage Monitor Consoles

POWERSTATION



16 to 24 Ch Powered Live Mixing Consoles

SPIRIT MIXERS ARE JUST PART OF A COMPREHENSIVE RANGE OF SOUNDCRAFT PROFESSIONAL AUDIO EQUIPMENT.

From project studios to world famous recording facilities, from clubs to stadiums, from young musicians to international superstars, Soundcraft designs have become synonymous with versatility, innovation and sonic excellence.

In the STUDIO

The 328XD Digital Production Console, with its ground breaking easy-to-use interface, has revolutionized low cost digital mixing in studios and live applications.

Soundcraft's range of nearfield studio monitors – Absolute Zero and Absolute 2 – have taken the Soundcraft name into top studios such as The Roundhouse and Ridge Farm, and won many friends in the production world.
John Leckie and Tony Tavenor are just two internationally acclaimed producers to use Soundcraft monitoring.

On the ROAD

A dedicated stable of live and powered mixers – Spirit 8, Live 4², LX7, Monitor 2 and the PowerStation range – are now employed by venues across the world from London's Barbican Theatre to the Olympic Stadium in Barcelona.

Around the WORLD

Soundcraft is committed to excellence in audio. In eighty-eight countries, in countless studios, venues and recordings Soundcraft provides the inspiration. You simply have to do the rest.

For details of the complete Soundcraft range contact your Soundcraft dealer or visit the Soundcraft website where you'll find comprehensive details of every product, including downloadable PDF brochures, technical support and user group information.

SONOSELF
LOCATION AUDIOVISUEL par VIDEOSON
8 rue du Château d'Eau
78790 Courgent
01 39 24 84 84
contact@sonoself.fr
sonoself.fr
En location sur sonoself.fr

A Harman International Company

Soundcraft reserves the right to improve or otherwise alter any information supplied in this document or any other documentation supplied hereafter.
E&OE 11/02

This equipment complies with the EMC Directive 89/336/EEC CE

Soundcraft Registered Community Trademark / RTM N° 000557827
Part N°: ZL0522

Soundcraft